Service Manual

CD7300 /F1N/K1G/S1G/C1G /N1G/N1B

CD Player

CD7300

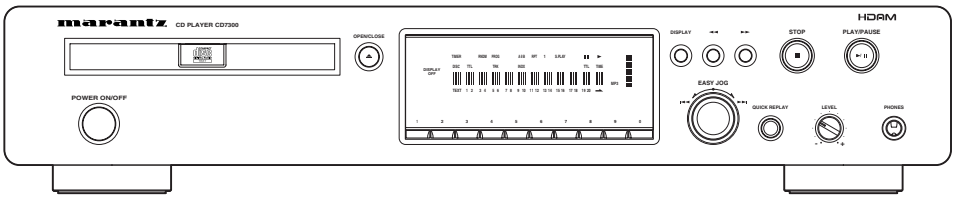

COMPACT disc DIGITAL AUDIO TEXT

HDAM

TABLE OF CONTENTS

SECTION ..... PAGE

1. TECHNICAL SPECIFICATIONS 1
2. SERVICE PROCEDURE 2
3. SERVICE MODE 6
4. BLOCK DIAGRAM 7
5. SCHEMATIC DIAGRAM 9
6. PARTS LOCATION 23
7. IC DATA 27
8. EXPLODED VIEW AND PARTS LIST 33
9. ELECTRICAL PARTS LIST 37

Please use this service manual with referring to the user guide (D.F.U.) without fail.
修理の際は、必ず取扱説明書を準備し操作方法を確認の上作業を行ってください。

marantz®

CD7300

Part no. 05AK855020
First Issue 2003.07
ecm

MARANTZ DESIGN AND SERVICE

Using superior design and selected high grade components, **MARANTZ** company has created the ultimate in stereo sound. Only original **MARANTZ** parts can insure that your **MARANTZ** product will continue to perform to the specifications for which it is famous.

Parts for your **MARANTZ** equipment are generally available to our National Marantz Subsidiary or Agent.

ORDERING PARTS :

Parts can be ordered either by mail or by Fax.. In both cases, the correct part number has to be specified.

The following information must be supplied to eliminate delays in processing your order :

1. Complete address
2. Complete part numbers and quantities required
3. Description of parts
4. Model number for which part is required
5. Way of shipment
6. Signature : any order form or Fax. must be signed, otherwise such part order will be considered as null and void.

USA

MARANTZ AMERICA, INC
1100 MAPLEWOOD DRIVE
ITASCA, IL. 60143
USA
PHONE : 630 - 741 - 0300
FAX : 630 - 741 - 0301

EUROPE / TRADING

MARANTZ EUROPE B.V.
P. O. BOX 8744, BUILDING SILVERPOINT
BEEMDSTRAAT 11, 5653 MA EINDHOVEN
THE NETHERLANDS
PHONE : +31 - 40 - 2507844
FAX : +31 - 40 - 2507860

BRAZIL

PHILIPS DA AMAZONIA IND. ELET. ITDA
CENTRO DE INFORMACOES AO
CEP 04698-970
SAO PAULO, SP, BRAZIL
PHONE : 0800 - 123123 (Discagem Direta Gratuita)
FAX : +55 11 534. 8988

***PROFESSIONAL* AMERICAS**

SUPERSCOPE TECHNOLOGIES, INC.
MARANTZ PROFESSIONAL PRODUCTS
2640 WHITE OAK CIRCLE, SUITE A
AURORA, ILLINOIS 60504 USA
PHONE : 630 - 820 - 4800
FAX : 630 - 820 - 8103

***PROFESSIONAL* AUSTRALIA**

TECHNICAL AUDIO GROUP PTY, LTD
558 DARLING STREET,
BALMAIN, NSW 2041,
AUSTRALIA
PHONE : 61 - 2 - 9810 - 5300
FAX : 61 - 2 - 9810 - 5355

CANADA

LENBROOK INDUSTRIES LIMITED
633 GRANITE COURT,
PICKERING, ONTARIO L1W 3K1
CANADA
PHONE : 905 - 831 - 6333
FAX : 905 - 831 - 6936

AUSTRALIA

QualiFi Pty Ltd,
24 LIONEL ROAD,
MT. WAVERLEY VIC 3149
AUSTRALIA
PHONE : +61 - (0)3 - 9543 - 1522
FAX : +61 - (0)3 - 9543 - 3677

THAILAND

MRZ STANDARD CO., LTD
746 - 754 MAHACHAI ROAD.,
WANGBURAPAPIROM, PHRANAKORN,
BANGKOK, 10200 THAILAND
PHONE : +66 - 2 - 222 9181
FAX : +66 - 2 - 224 6795

SINGAPORE

WO KEE HONG DISTRIBUTION PTE LTD
130 JOO SENG ROAD
#03-02 OLIVINE BUILDING
SINGAPORE 368357
PHONE : +65 6858 5535 / +65 6381 8621
FAX : +65 6858 6078

NEW ZEALAND

WILDASH AUDIO SYSTEMS NZ
14 MALVERN ROAD MT ALBERT
AUCKLAND NEW ZEALAND
PHONE : +64 - 9 - 8451958
FAX : +64 - 9 - 8463554

TAIWAN

PAI- YUING CO., LTD.
6 TH FL NO, 148 SUNG KIANG ROAD,
TAIPEI, 10429, TAIWAN R.O.C.
PHONE : +886 - 2 - 25221304
FAX : +886 - 2 - 25630415

MALAYSIA

WO KEE HONG ELECTRONICS SDN. BHD.
SUITE 8.1, LEVEL 8, MENARA GENESIS,
NO. 33, JALAN SULTAN ISMAIL,
50250 KUALA LUMPUR, MALAYSIA
PHONE : +60 3 - 21457677
FAX : +60 3 - 21458180

JAPAN *Technical*

MARANTZ JAPAN, INC.
35- 1, 7- CHOME, SAGAMIONO
SAGAMIHARA - SHI, KANAGAWA
JAPAN 228-8505
PHONE : +81 42 748 1013
FAX : +81 42 741 9190

日本マランツ株式会社

本　社　〒228-8505
神奈川県相模原市相模大野7-35-1
営業本部　〒150-0022
東京都渋谷区恵比寿南1-11-9

KOREA

MK ENTERPRISES LTD.
ROOM 604/605, ELECTRO-OFFICETEL, 16-58,
3GA, HANGANG-RO, YONGSAN-KU, SEOUL
KOREA
PHONE : +822 - 3232 - 155
FAX : +822 - 3232 - 154

SHOCK, FIRE HAZARD SERVICE TEST :

CAUTION : After servicing this appliance and prior to returning to customer, measure the resistance between either primary AC cord connector pins (with unit NOT connected to AC mains and its Power switch ON), and the face or Front Panel of product and controls and chassis bottom.

Any resistance measurement less than 1 Megohms should cause unit to be repaired or corrected before AC power is applied, and verified before it is return to the user/customer.

Ref. UL Standard No. 1492.

In case of difficulties, do not hesitate to contact the Technical Department at above mentioned address.

030307MIT

1. TECHNICAL SPECIFICATIONS

Audio characteristics

Channels ..... 2 channels
Frequency response ..... 2 Hz to 20 kHz
Dynamic range ..... 100 dB
Signal-to-noise ratio ..... 110 dB
Channel separation ..... 100 dB (1 kHz)
Harmonic distortion ..... 0.0025% (1 kHz)
Wow & flutter ..... Precision of quartz
Error correction system ..... Cross-interleave Reed Solomon code (CIRC)
Audio output ..... 2.0 V rms, stereo
Headphone output ..... 18 mW/32 ohms (variable maximum)
Digital output
  Coaxial output (pin jack) ..... 0.5 Vp-p, 75 ohms
  Optical output (square optical connector) ..... -19 dBm

Optical readout system

Laser ..... AlGaAs semiconductor
Wavelength ..... 780 nm

Signal system

Sampling frequency ..... 44.1 kHz
Quantization ..... 16-bit linear/channel

Power supply

Power requirement ..... AC 220V 60Hz (/C)
..... AC 100V 50/60Hz (/F)
..... AC 110/220V 50/60Hz (/K)
..... AC 230V 50Hz (/N)
..... AC 230V 50/60Hz (/S)

Power consumption ..... 12 W

Cabinet, etc.

Maximum dimensions ..... 440(W) x 89(H) x 317 (D) mm
Weight ..... 5.7 kg
Allowable operating temperature ..... +5 to +35°C
Allowable operating humidity ..... 5 to 90% (no condensation)

2. SERVICE PROCEDURE

Emergency Eject

1. To open the stucked tray, insert a pin into the eject pinhole and push the eject lever.
2. Use a pin ϕ4mm or less.

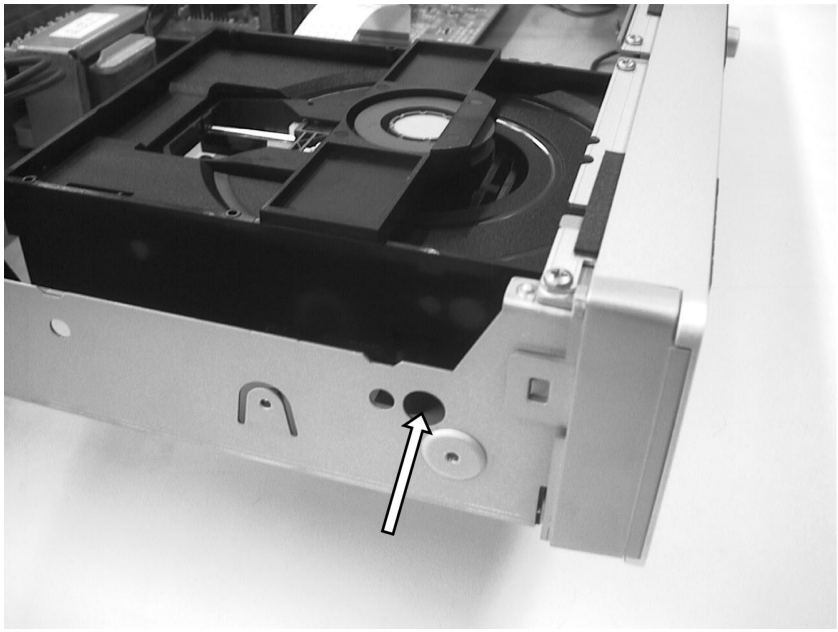

This picture shows the unit upside down. The eject lever is pointed by the arrow. The lever is thin so aim the narrow area carefully.

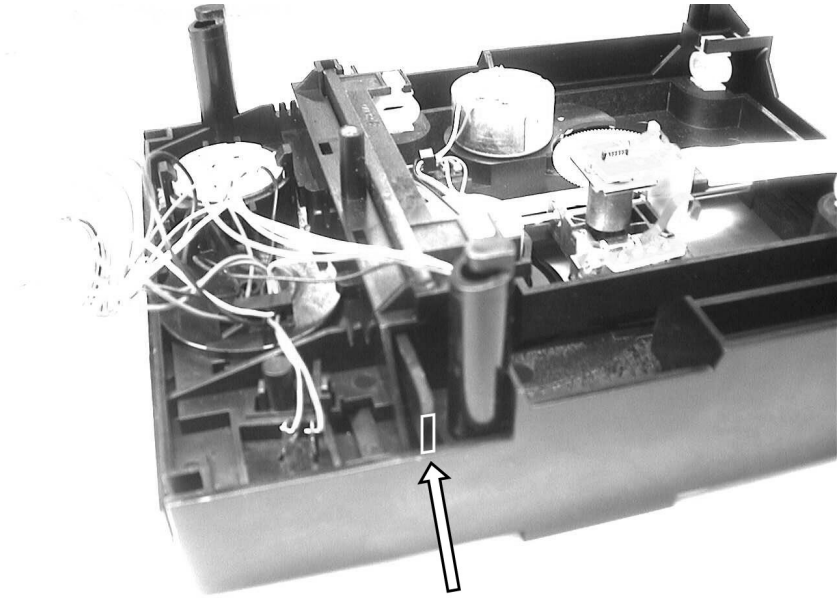

Cautions in Assembling and Disassembling

When removing the flat wire PS01, connecting the optical pick up and the CD decorder board, short-cut the two lands pointed by the arrow with solder. Otherwise the laser diode may be damaged by static electricity.

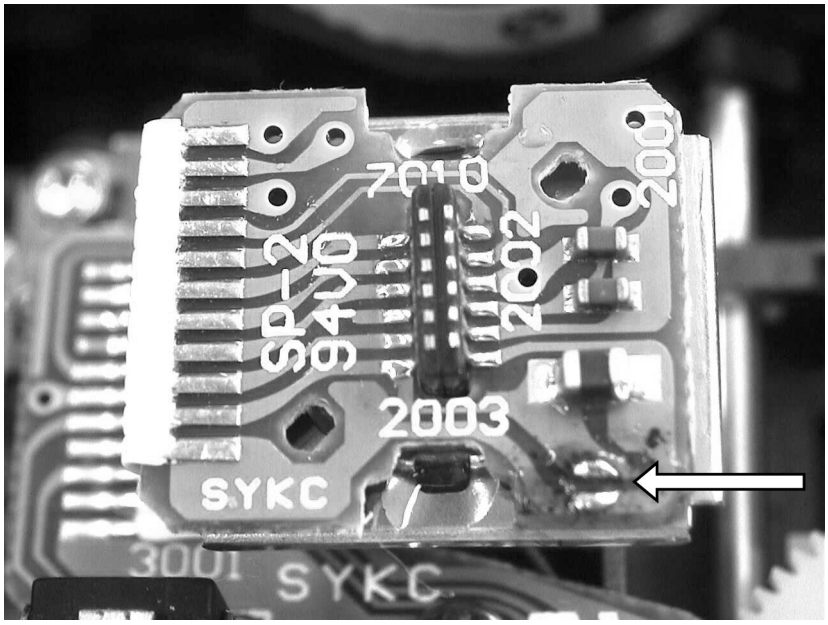

CD Decorder Board (PS01) Repair

When Repairing the CD decorder board PS01, you can fix the board on the loader unit as shown in the pictuer below with the flat wires that are provided as service parts.

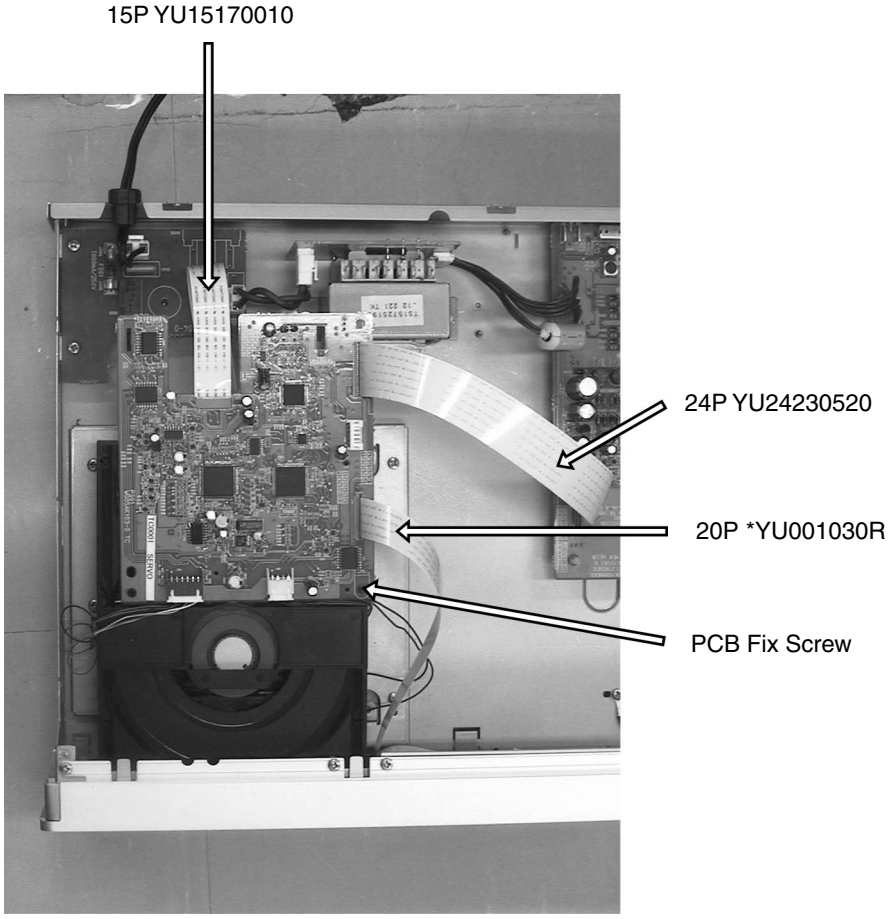

Disk Tray Open/Close Speed Adjustment

Open/Close speed of the tray can be changed.

When vibration occurs upon tray open/close and some unusual behavior happens, change the tray speed to stop vibration.

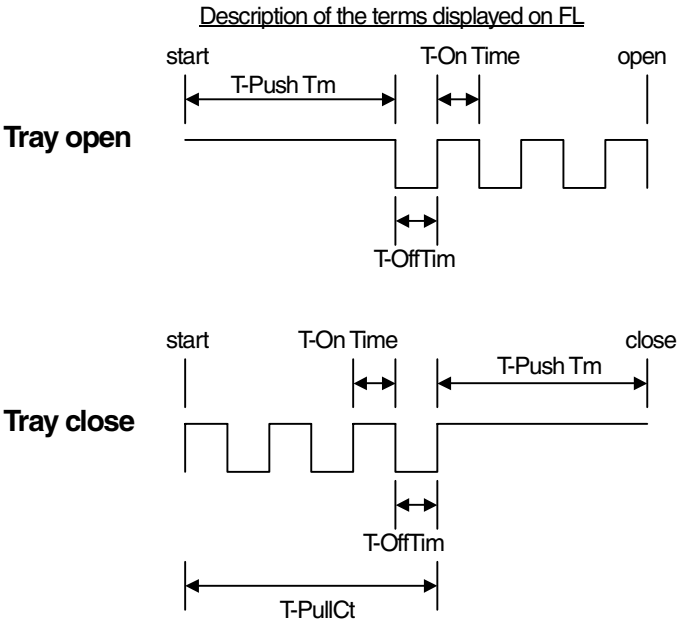

T-PushTm

DC driving time on Tray open operation.

Tray is DC driven at start opening.

Then Tray is driven by pulse.

Time can be set between 0-2550ms.

T-On Time

Duration time of High in pulse drive.

Time can be set between 0-255ms.

T-OffTim

Duration time of Low in pulse drive.

Time can be set between 0-255ms.

T-PullCt

The number of pulses on Tray close operation.

<Vibration on Disc Tray Open / Close>

Step 1. With pressing **DISPLAY** and **QUICK REPLAY** buttons, press **POWER** button.

Step 2. Press **EASY JOG** button.

"T-OnTime 015" (means Tray On Time 015ms default) is displayed.

Turn **EASY JOG** to change tray open/close speed from 000 to 255ms. Turn the number smaller to make the open/close speed slower. Turn the number bigger to make the speed faster. Set bigger number to stop the tray vibration. But the open/close speed becomes faster.

Press **EASY JOG** button again. The display changes as shown below so you can change other parameters for the open/close speed.

Display (Default Setting)	Description	Bigger Number	Smaller Number
T- OffTim 003	When open/close speed is too fast. Note) 001, 002, 003 cannot be set.	open/close speed becomes faster	open/close speed becomes slower
T- PushTm 070	When vibration cannot be stopped by adjusting **T-OnTime**.	open/close speed becomes slower	open/close speed becomes faster
T- PullCt 040	When disc clamp miss happens. Set smaller number to make it better.		

Step 3. Press **EASY JOG** button to complete adjustment.

Step 4. Press **STOP** button to store the settings in memory.

To reset all the settings to default status, press number **0** button in Service Mode 0 (Display : Ver ∗. ∗∗ P00). When miss-operated, press number **0** button to retry.

Disc Tray の Open/Close Speed 調整方法

この調整は、Disc Tray の open/close speed を可変できます。

特に、Tray open/close にて Tray が横揺れし、不自然な動作が発生した時に

open/close の speed 調整にて、Tray の横揺れが無くなります。

Display に表示される用語の説明

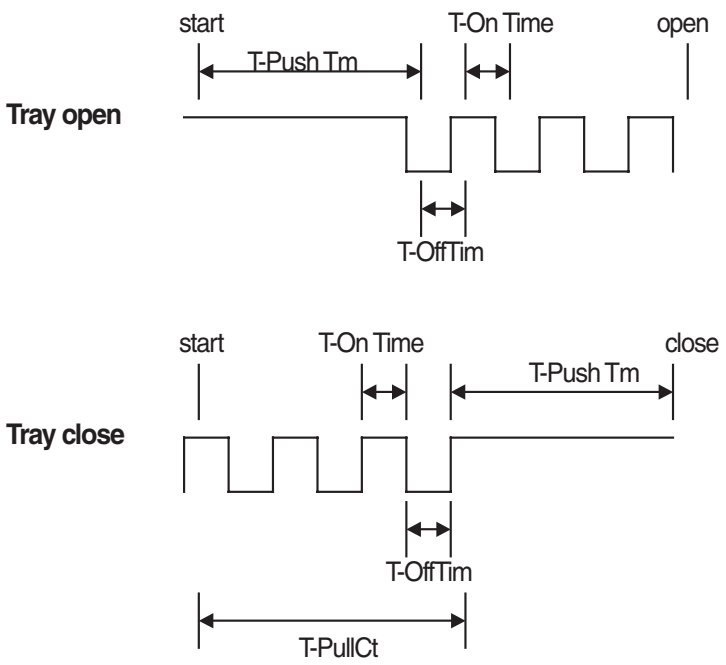

T-PushTm

Tray open 動作時の DC 駆動時間です。

open の start は DC 駆動です。

その後パルス駆動になります。

0～2550ms 迄可変できます。

T-On Time

パルス駆動の High の時間です。

0～255ms 迄可変できます。

T-OffTim

パルス駆動の Low の時間です。

0～255ms 迄可変できます。

T-PullCt

Tray close 動作時のパルスの数です。

＜**Tray open/close** 時の横揺れ＞

手順 1．**DISPLAY** と **QUICK REPLAY** ボタンを押しながら **POWER** ボタンを押します。

手順 2．**EASY JOG** ボタンを PUSH ENTER します。

Display に“ **T- OnTime 015**”（初期設定 Tray on time 015ms の意味）と表示。

EASY JOG ボタンを廻し 000 から 255ms の範囲で Tray の open/close Speed が可変できます。

数字が小さくなると open/close Speed は遅くなります。数字が大きくなると早くなります。

Tray の open/close の横揺れは数字を大きくする事により、横揺れは、無くなります。

但し、open/close speed は速くなります。

更に **EASY JOG** ボタンを PUSH ENTER すると、押す度に下記の表示に変わり

open/close speed を可変できます。

表示内容 （ 初期設定）	項　目	数字を小さくする	数字を大きくする
T- OffTim 003	open/close speed が速すぎる時 注）000・001・002 は使用出来ません。	open/close speed が速くなる	open/close speed が遅くなる
T- PushTm 070	open 時の横揺れが **T- OnTime** で修正できない時 DC 駆動時間を増す	open/close speed が遅くなる	open/close speed が速くなる
T- PullCt 040	クランプミスの時、数字を小さくするとクランプミスが改善されます。		

手順 3．**EASY JOG** ボタンの PUSH ENTER で設定が決定します。

手順 4．**STOP** ボタンを押します。（メモリーされます）

初期設定に戻すときは、サービスモード０(表示は Ver：＊．＊＊ P00)の時、数字ボタン０のボタンを押します。

（操作を間違えた時も０のボタンを押し操作をやり直します）

3. SERVICE MODE

1. Turning into Service Mode

   While pressing **DISPLAY** and **QUICK REPLAY** buttons, press **POWER** button.

2. Mode0 (Display **: Ver :** ∗.∗∗**P00** Version number of the micro computer is displayed)

   Status: [FOCUS OFF] [SPINDLE OFF] [RADIAL OFF] [MUTE ON]

   • While pressing ▶▶ and ◀◀ buttons, the sledge moves toward the outer edge. Release the button makes the sledge return to the origin.

   Press **EASY JOG** or **NEXT** ▶▶| button on the remote to go to Mode 1.

3. Mode 1 (Display **: Ver :** ∗.∗∗**P01**)

   Status: [FOCUS ON] [SPINDLE OFF] [RADIAL OFF] [MUTE ON]

   • Press **NEXT** ▶▶| button to go to Mode 2.

   • Press **PREV** |◀◀ button to go to Mode 0.

4. Mode 2 (Display **: Ver :** ∗.∗∗**P02**)

   Status: [FOCUS ON] [SPINDLE ON] [RADIAL OFF] [MUTE ON]

   • Press **NEXT** ▶▶| button to go to Mode 3.

   • Press **PREV** |◀◀ button to go to Mode 1.

5. Mode 3 (Display **: Ver :** ∗.∗∗**P03**)

   Status: [FOCUS ON] [SPINDLE ON] [RADIAL ON] [MUTE OFF]

   • Press **PREV** |◀◀ button to go to Mode 1.

∗ In this Service Mode, all of the following button functions work in any status.

1) Press **DISPLAY** button to light up all the FL segments. Press it again then each FL segment lights up one by one.

2) Press **STOP** button. Then press a button on the unit. The name of the button is displayed.

   Pressing a button on the remote displays the RC-5 code of the button.

3) Press **PLAY** button in Mode 1, 2 or 3 then normal operation can be performed. If an error occurs the error number is displayed. (Ex : Err 10) See the table below.

6. Terminating Service Mode

   Turn off power to quit Service Mode.

3. サービスモード

1. サービスモードへの入り方

   DISPLAYと**QUICK REPLAY**ボタンを押しながら**POWER**ボタンを押します。

2. モード０（表示 Ver ： ∗.∗∗ **P00** マイコンの Ver. が表示されます）

   状態：[FOCUS OFF] [SPINDLE OFF] [RADIAL OFF] [MUTE ON]

   ・ ▶▶、◀◀ ボタンを押している間だけスレッドが外周へ移動します。ボタンを放すと原点に戻ります。

   EASY JOGまたはリモコンの **NEXT** ▶▶| ボタンを押すとモード１へ移行します。

3. モード１（表示 Ver ： ∗.∗∗ **P01** ）

   状態：[FOCUS ON] [SPINDLE OFF] [RADIAL OFF] [MUTE ON]

   ・**NEXT** ▶▶| ボタンを押すとモード２へ移行します。

   ・**PREV** |◀◀ ボタンを押すとモード０へ移行します。

4. モード２（表示 Ver ： ∗.∗∗ **P02** ）

   状態：[FOCUS ON] [SPINDLE ON] [RADIAL OFF] [MUTE ON]

   ・**NEXT** ▶▶| ボタンを押すとモード３へ移行します。

   ・**PREV** |◀◀ ボタンを押すとモード１へ移行します。

5. モード３（表示 Ver ： ∗.∗∗ **P03** ）

   状態：[FOCUS ON] [SPINDLE ON] [RADIAL ON] [MUTE OFF]

   ・**PREV** |◀◀ ボタンを押すとモード２へ移行します。

∗ サービスモードの全ての状態で以下のボタンが有効です。

1) **DISPLAY** ボタンを押すと FL が全点灯します。
   もう一度押すと各セグメントが順次点灯します。

2) **STOP** ボタンを押し、更に本体のボタンを押すとボタンの名前が表示されます。
   リモコンのボタンを押すと RC-5 コードが表示されます。

3) モード１．２．３の状態で **PLAY** ボタンを押すと通常と同じ動作となります。ただし、動作中、異常が確認された時にエラー番号が表示されます。（例：Err 10）下記の表を参考にしてください。

6. サービスモードの解除

   電源を切るとサービスモードが解除されます。

Error Code	Error
Err 02	FOCUS Error
Err 07	SUB CODE Error
Err 08	T. O. C. Error
Err 09	DECODER Error
Err 10	RADIAL Error
Err 11, 12	SLEDGE Error
Err 13	SPINDLE Error
Err 16 ~ 20	SEARCH Error
Err 30	DOOR Error
Err 31	TRAY Error
Err 32 ~ 47	BUTTON INPUT Error

4. BLOCK DIAGRAM

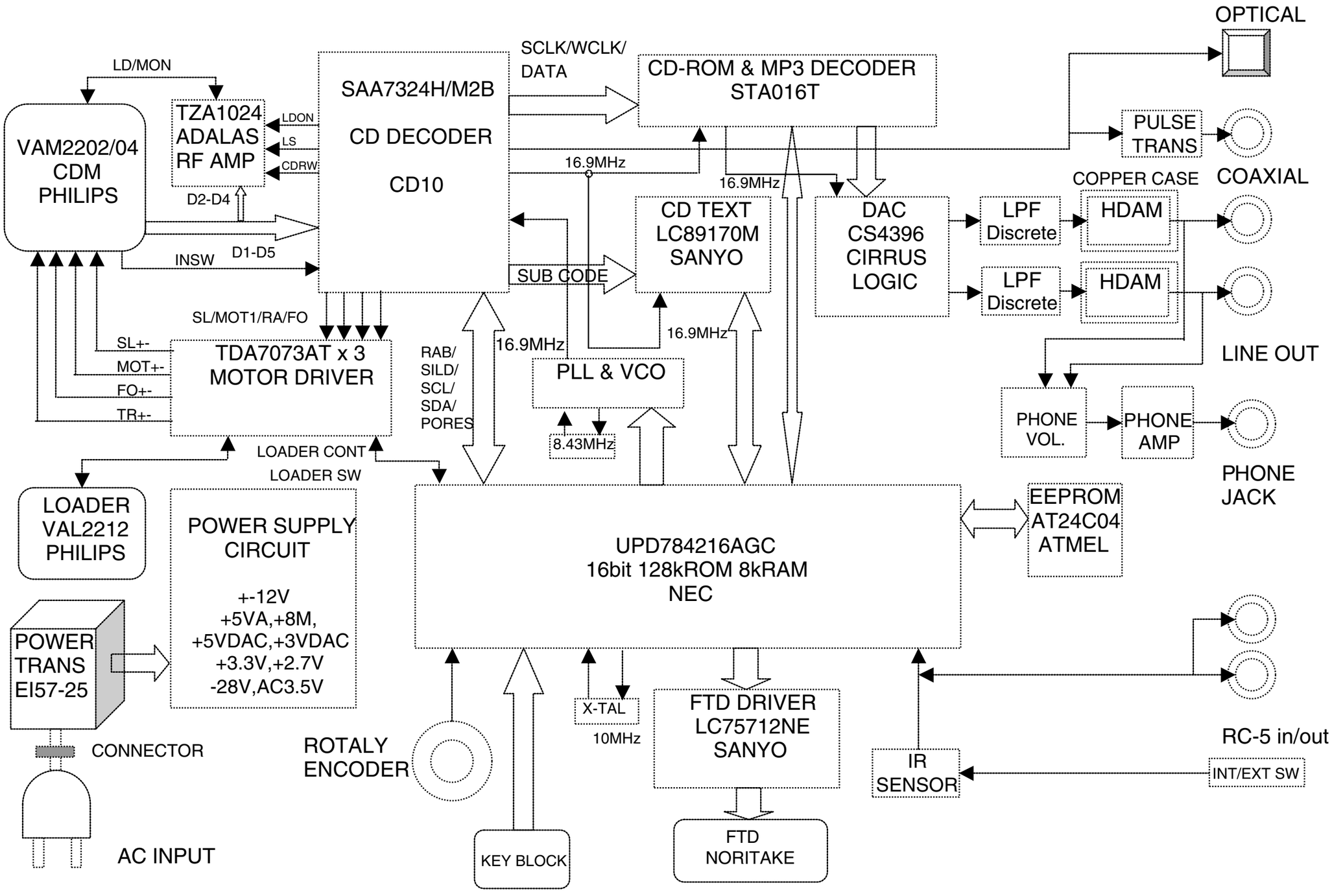

5. SCHEMATIC DIAGRAM

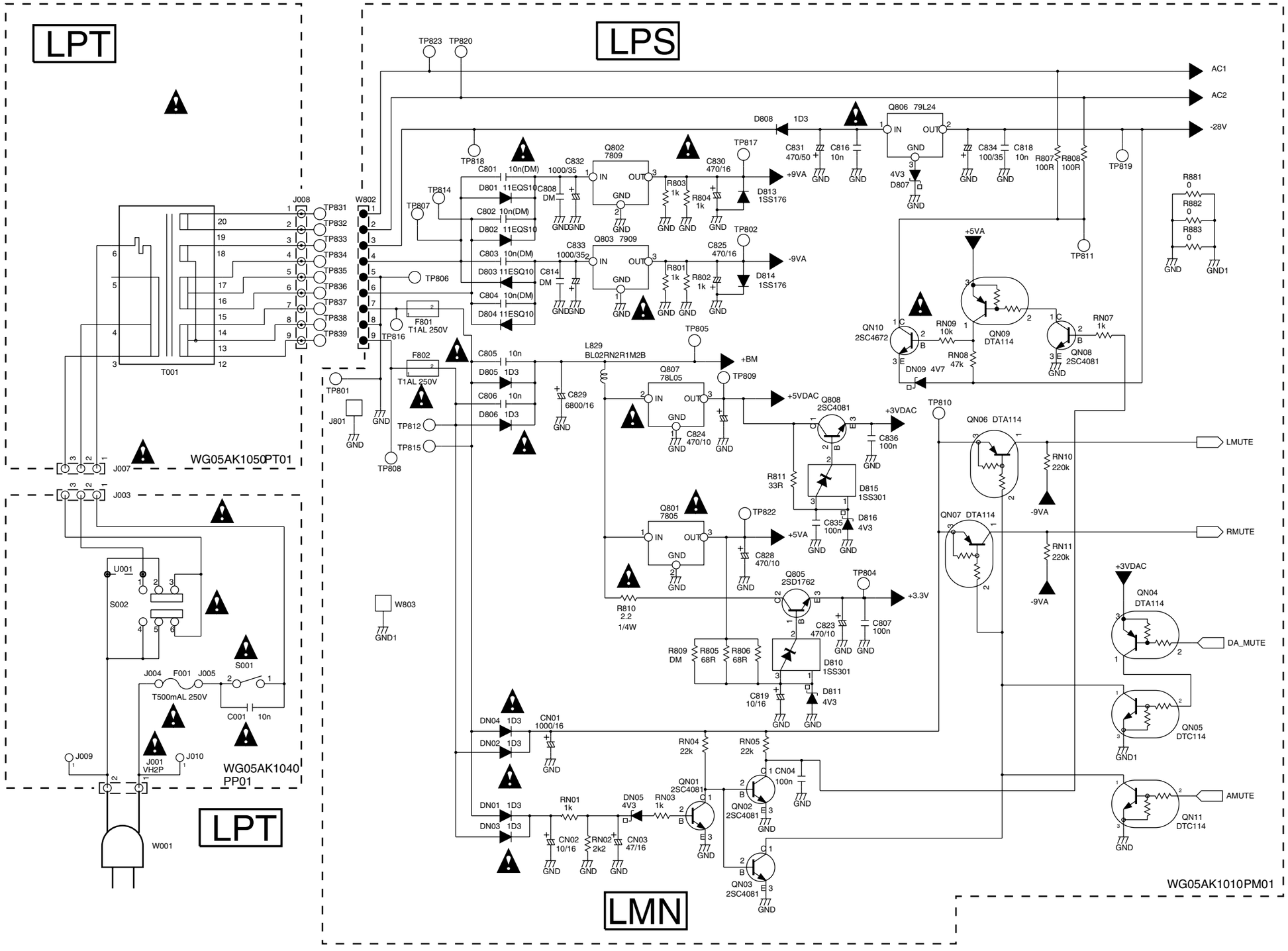

LSE

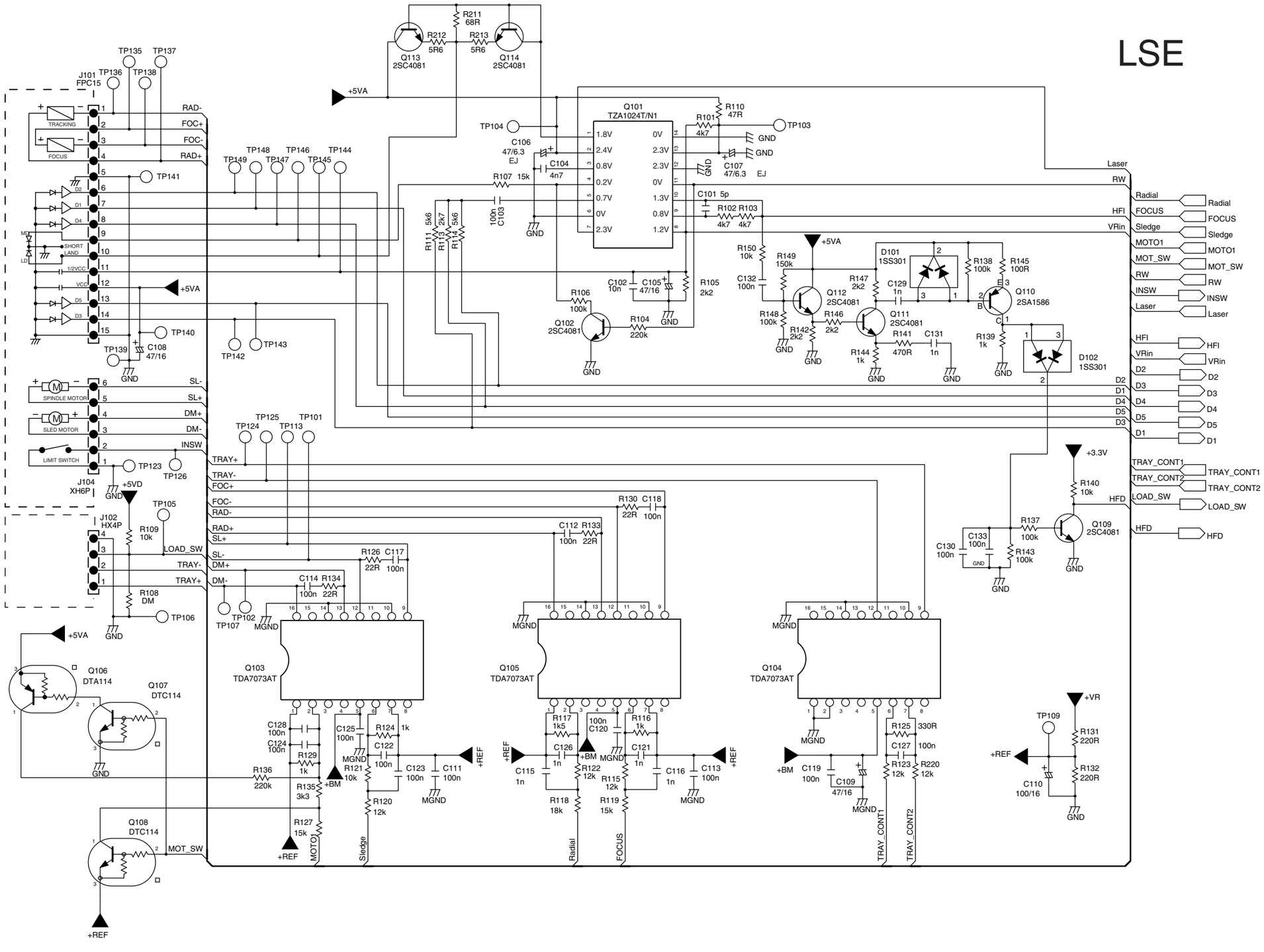
J101
FPC15
TRACKING
FOCUS
RAD-
FOC+
FOC-
RAD+
SHORT LAND
1/2VCC
VCC
SPINDLE MOTOR
SLED MOTOR
LIMIT SWITCH
SL-
SL+
DM+
DM-
INSW
J104
XH6P
J102
HX4P
LOAD_SW
TRAY+
TRAY-
Q101
TZA1024T/N1
Q102
2SC4081
Q103
TDA7073AT
Q104
TDA7073AT
Q105
TDA7073AT
Q106
DTA114
Q107
DTC114
Q108
DTC114
Q109
2SC4081
Q110
2SA1586
Q111
2SC4081
Q112
2SC4081
Q113
2SC4081
Q114
2SC4081
D101
1SS301
D102
1SS301
+5VA
+5VD
+3.3V
+VR
+REF
+BM
GND
MGND
Laser
RW
Radial
FOCUS
HFI
VRin
Sledge
MOTO1
MOT_SW
INSW
D2
D1
D4
D5
D3
TRAY_CONT1
TRAY_CONT2
LOAD_SW
HFD

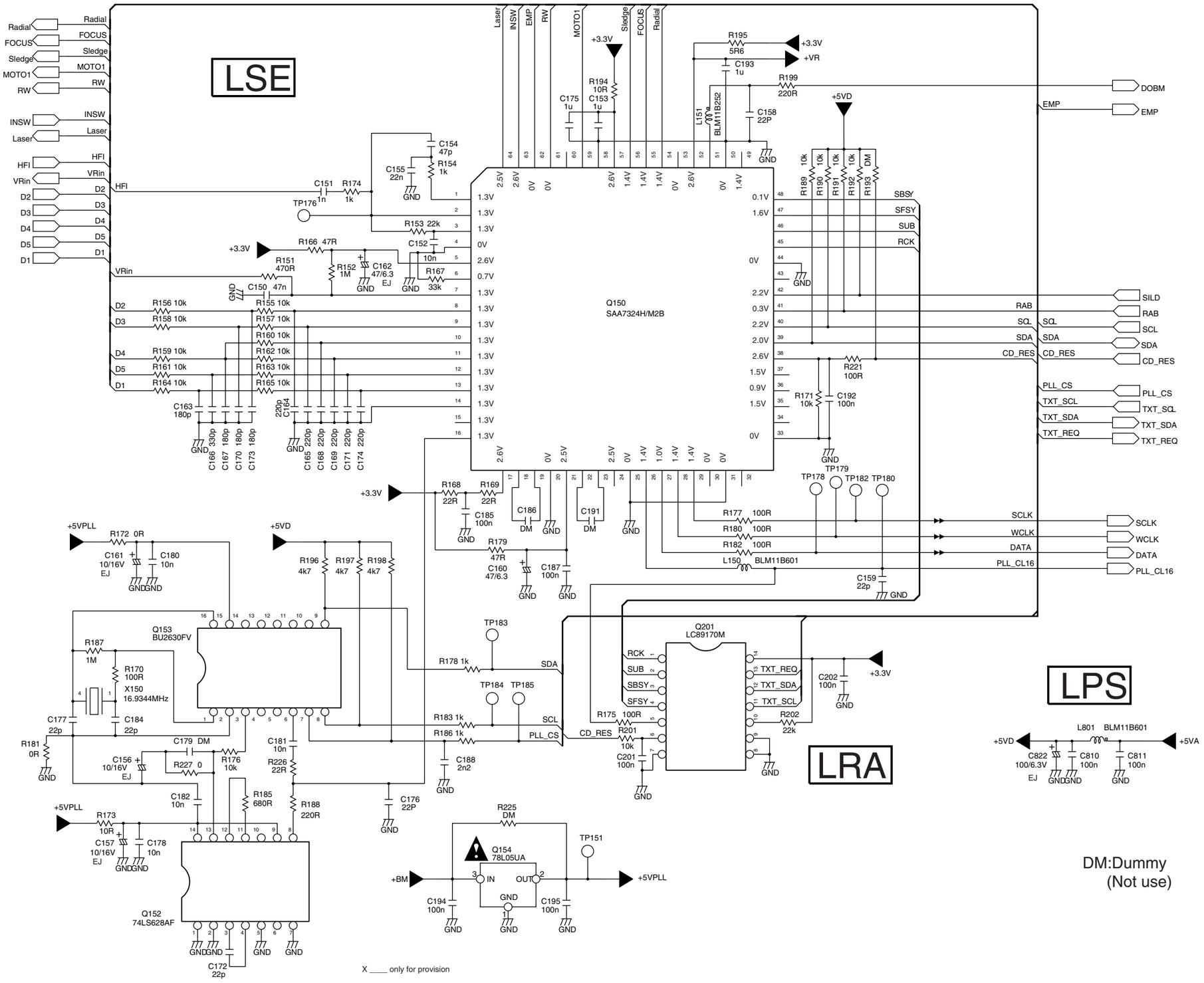
LSE
LPS
LRA
Q150
SAA7324H/M2B
Q153
BU2630FV
Q152
74LS628AF
Q201
LC89170M
Q154
78L05UA
X150
16.9344MHz
DM:Dummy
(Not use)
X ____ only for provision

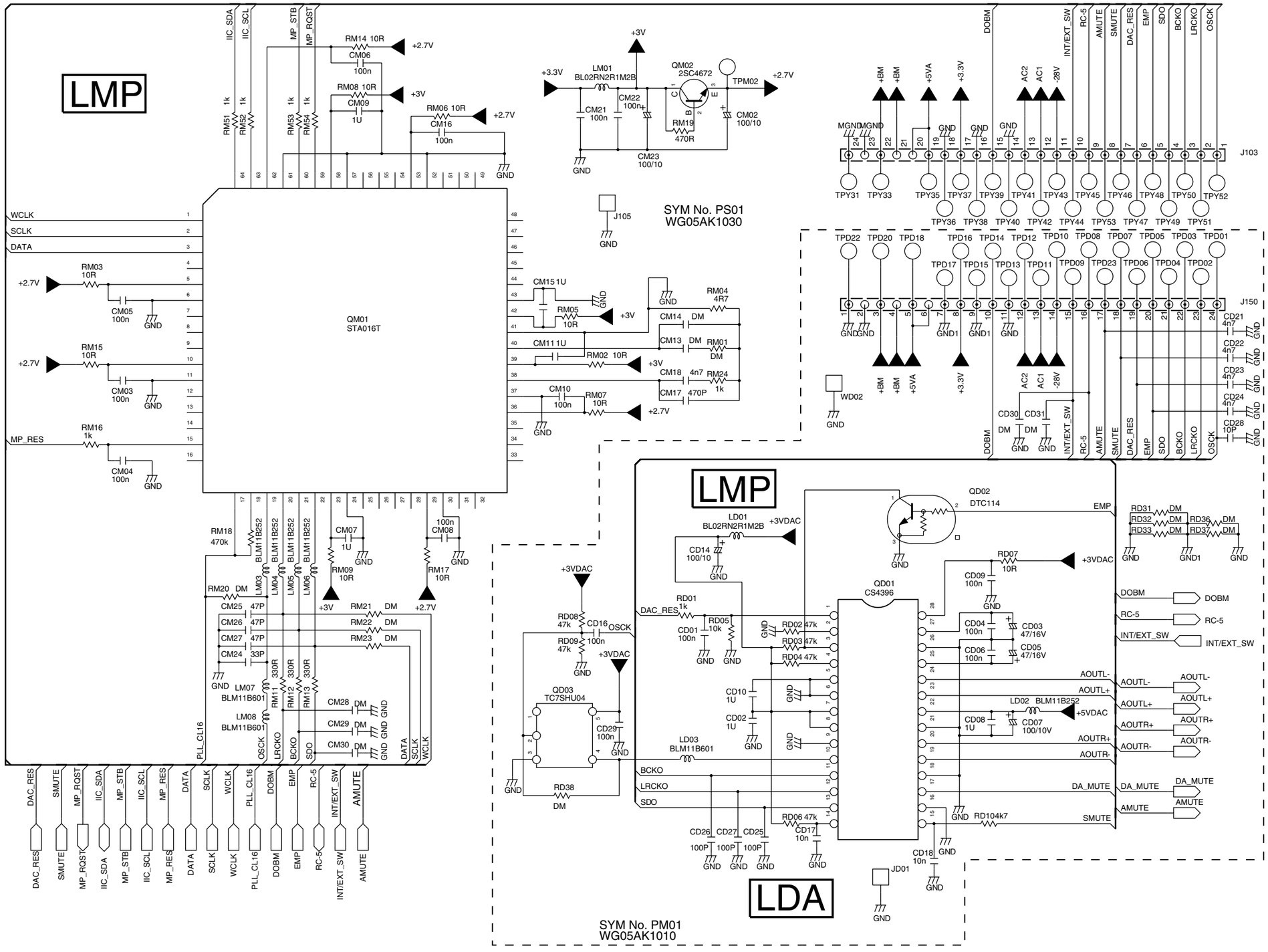
LMP
QM01
STA016T
SYM No. PS01
WG05AK1030
J103
J150
J105
WD02
LMP
LDA
QD01
CS4396
QD02
DTC114
QD03
TC7SHU04
JD01
SYM No. PM01
WG05AK1010

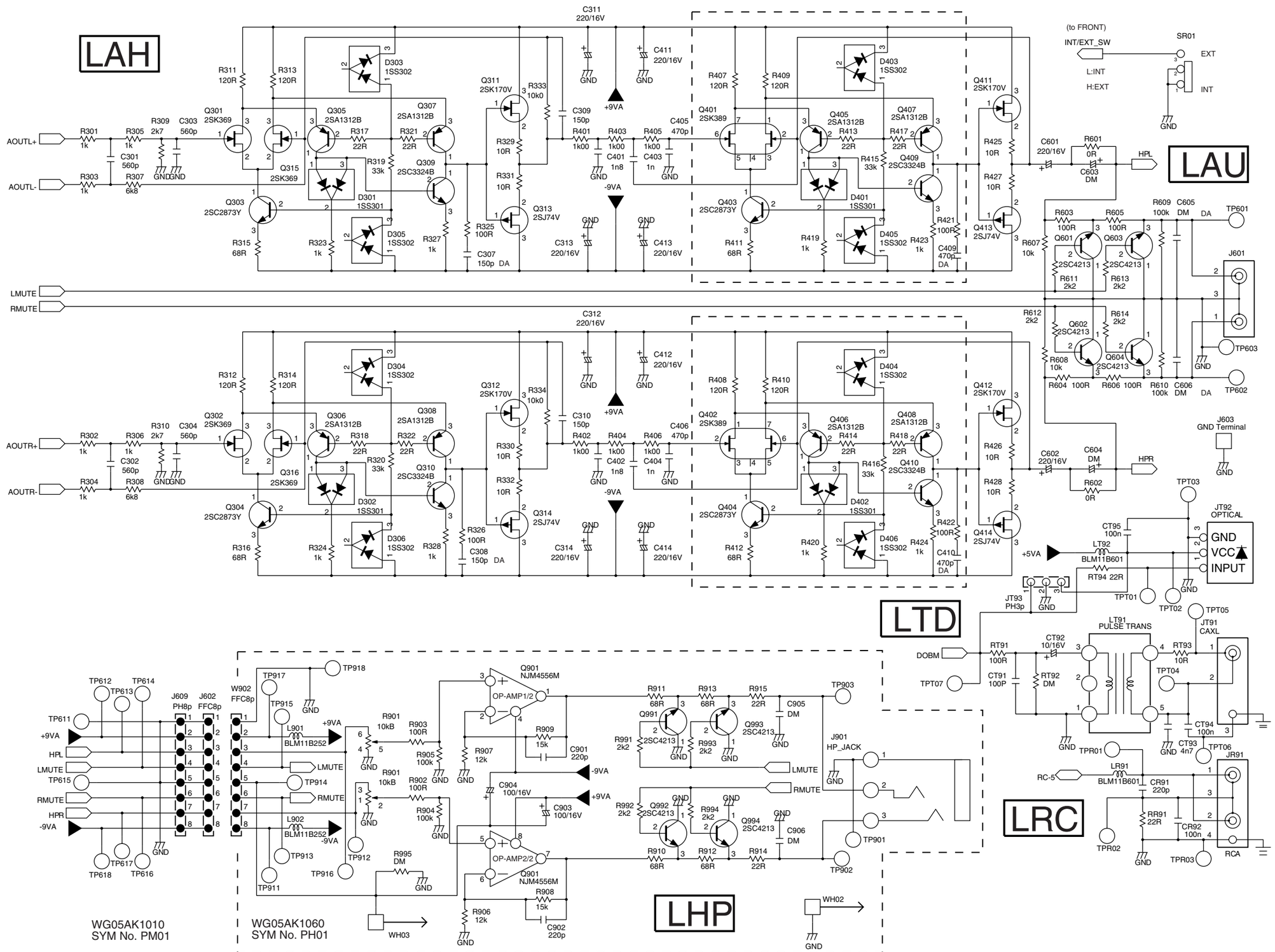
LAH
LAU
LTD
LRC
LHP
AOUTL+
AOUTL-
AOUTR+
AOUTR-
LMUTE
RMUTE
HPL
HPR
DOBM
RC-5
INT/EXT_SW
(to FRONT)
L:INT
H:EXT
SR01
EXT
INT
GND
+9VA
-9VA
+5VA
DA
DM
J601
J603
GND Terminal
JT92
OPTICAL
GND
VCC
INPUT
JT91
CAXL
LT91
PULSE TRANS
JR91
RCA
J609
PH8p
J602
FFC8p
W902
FFC8p
J901
HP_JACK
OP-AMP1/2
OP-AMP2/2
Q901
NJM4556M
WH02
WH03
WG05AK1010
SYM No. PM01
WG05AK1060
SYM No. PH01

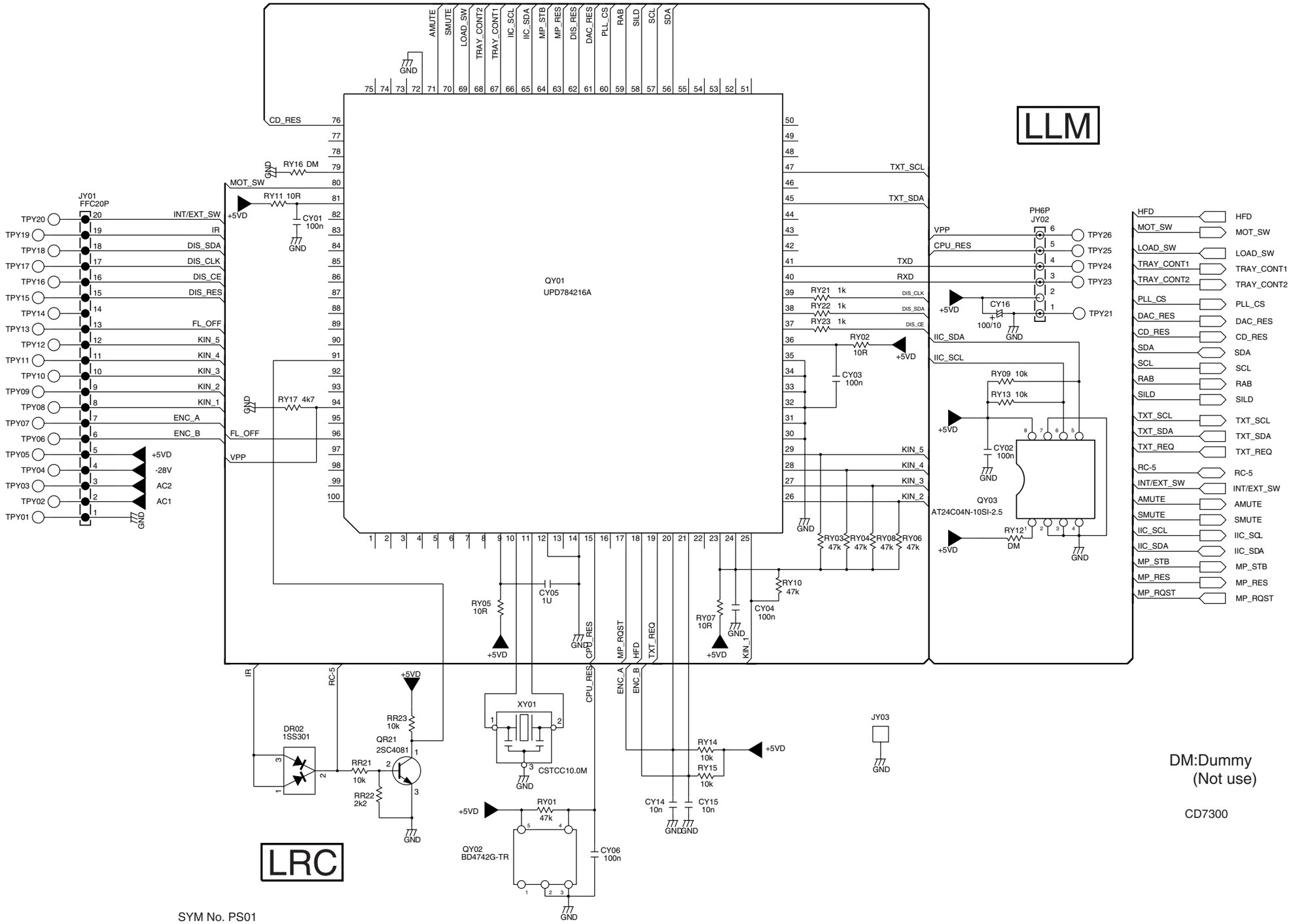

SYM No. PS01
WG05AK1030

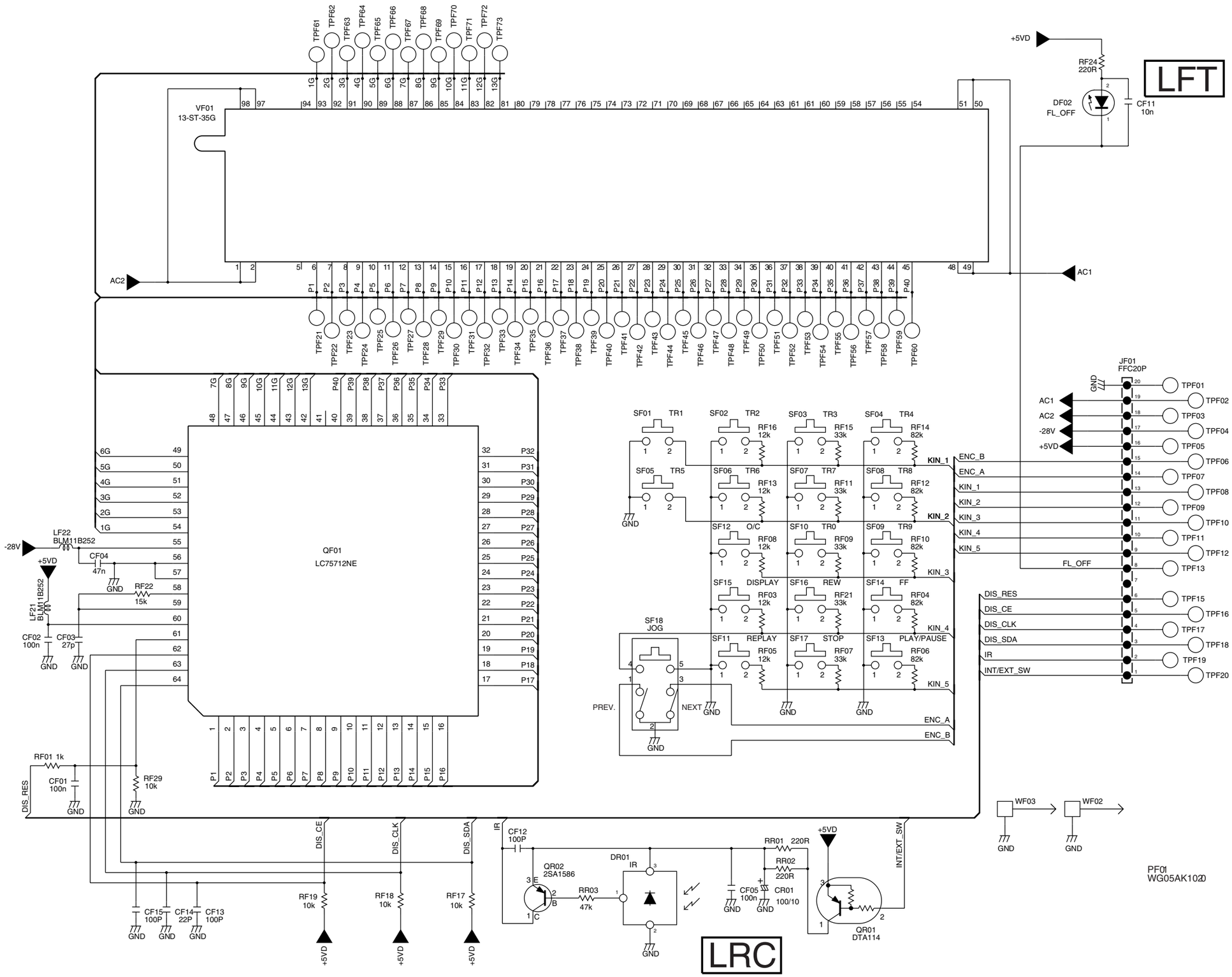
LFT
LRC
VF01
13-ST-35G
QF01
LC75712NE
JF01
FFC20P
PF01
WG05AK102D
QR02
2SA1586
QR01
DTA114
DR01
IR
DF02
FL_OFF
CF11
10n
RF24
220R
+5VD
-28V
AC1
AC2
GND
DIS_RES
DIS_CE
DIS_CLK
DIS_SDA
INT/EXT_SW
ENC_A
ENC_B
KIN_1
KIN_2
KIN_3
KIN_4
KIN_5
FL_OFF
SF18
JOG
PREV.
NEXT
WF03
WF02

6. PARTS LOCATION

PM01

QN03 Q806 D807 D808
QN06 QN07 DN09 QN08-QN11 DN01-DN04 D806 D801-D804
QN05 QN04 D816 DN05 QN01 QN02 D805
Q808 D815 Q807 Q805 D810 Q801 D813 Q802 D814 Q803
QD03 D301-D305(Odd) D401-D405(Odd) Q427 Q603
QD02 Q301-Q315(Odd) Q401-Q409(Odd) Q411 Q613
QD01 D302-D306(Even) D402-D406(Even) Q414 Q604
Q302-Q316(Even) Q402-Q410(Even) Q412 Q602

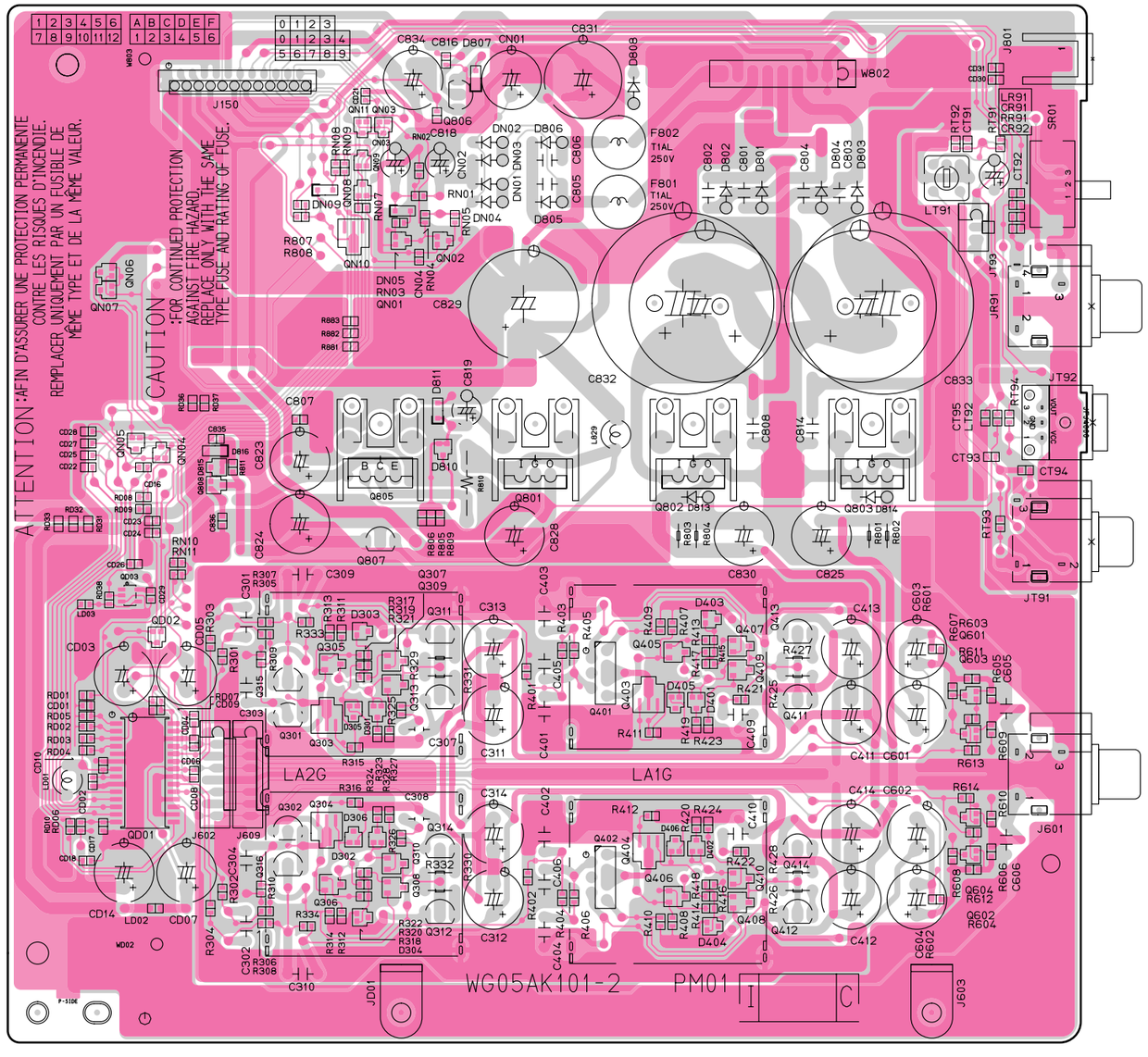

PP01

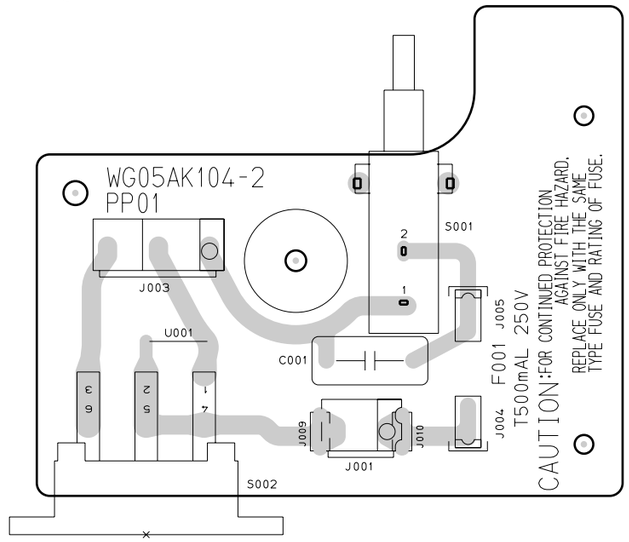

PH01

Q992 Q901 Q991
Q994 Q993

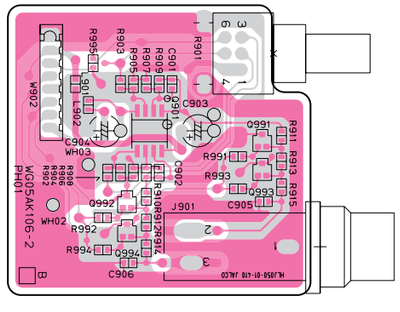

PT01

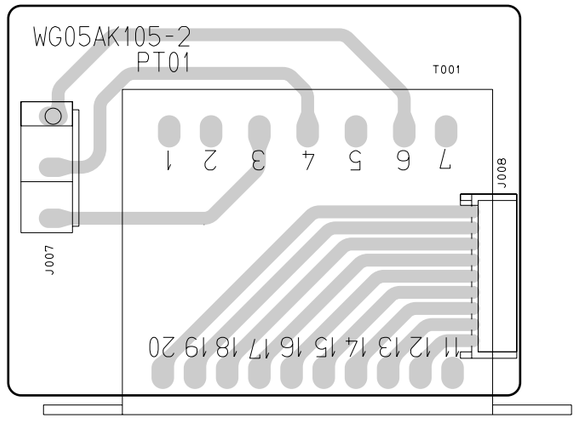

PF01

QR02 DF02
QR01 DR01

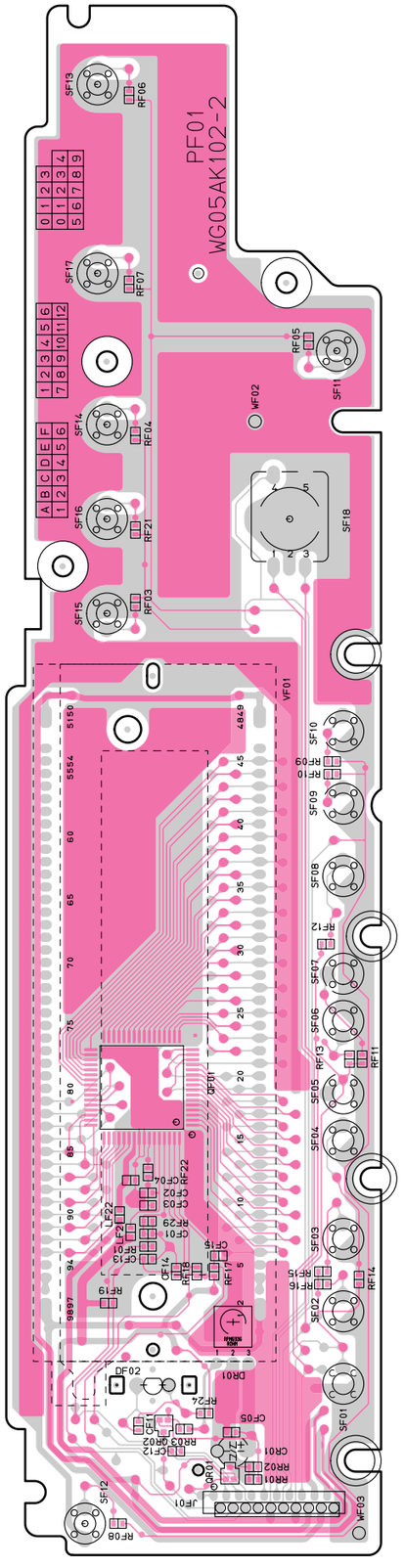

PS01

QM02 QM01 QY03 Q201 QY01 QY02 DR02 QR21 Q104
Q113 Q101 Q114 Q150 Q153
Q102 Q112 D101 Q110 D102 Q152
Q105 Q103 Q106-108 Q111 Q109 Q154

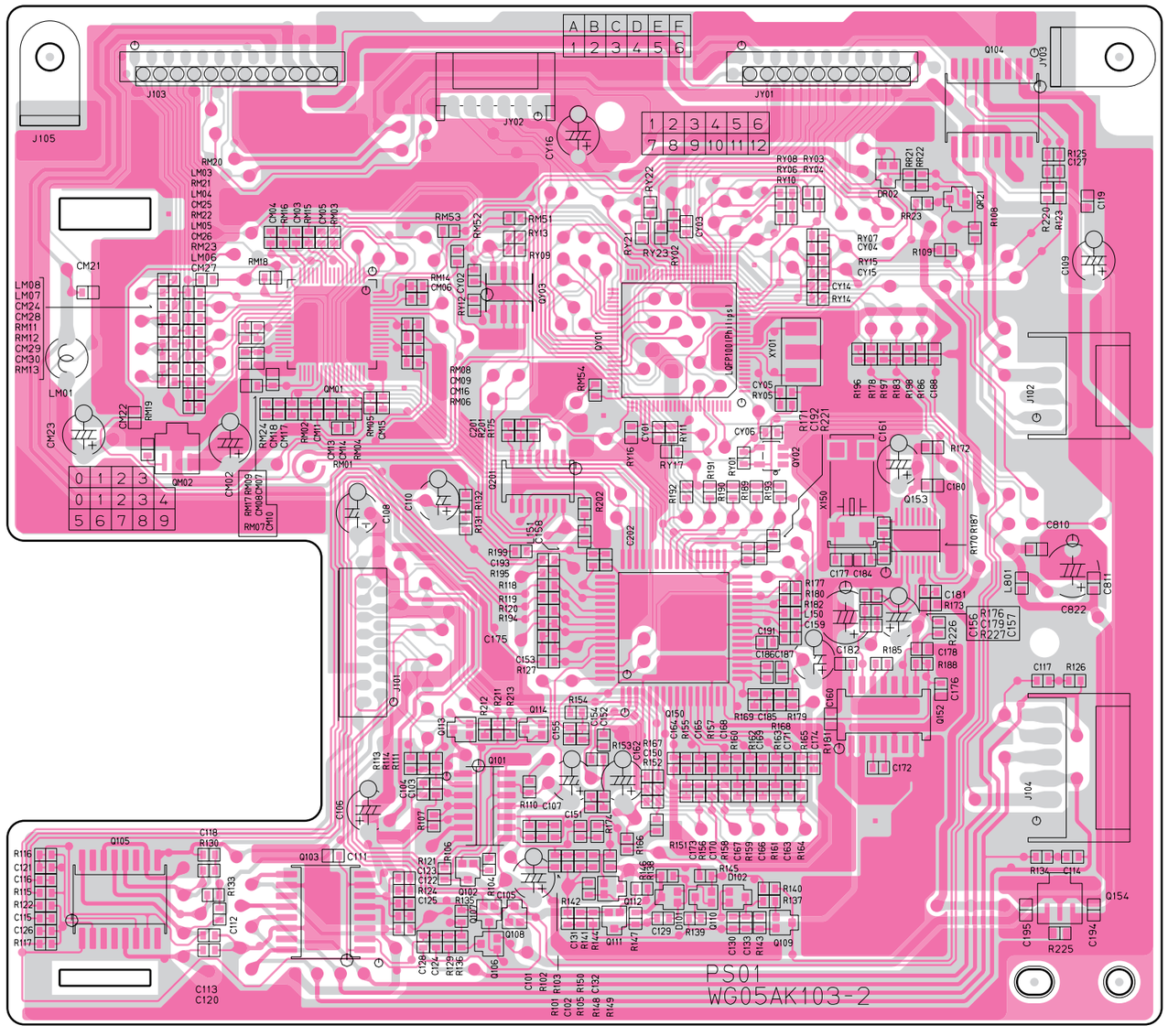

7. IC DATA

QY02:BD4742G

Pin Assignment

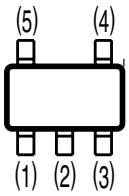

1pin : N.C.
2pin : SUB
3pin : GND
4pin : Vout
5pin : Vcc

Q153:BU2630FV

Pin descriptions

Pin No.	Pin name	Name	Function	I/O cuircuit
16	XOUT	Crystal resonator	For reference frequency	TYPE A
1	XIN			
2	V_{SS}			
3	RPD	Phase comparator output	This is LO if the locally divided value is higher than the reference frequency, HI if it is lower, and Z if it matches.	TYPE E
4	P−R	Output port	This is controlled by the input data.	TYPE D
5	RON			
6	F−R	VCO input	Local input for reception	TYPE F
7	CE	Chip enable clock signal serial data	When CE is HIGH, the DA synchronized to the rise of CK is read into the internal shift register, and is latched at the timing of the CE fall.	TYPE B
8	CK			
9	DA			
10	LD	Unlock output	This goes ON when the PLL is unlocked on the transmission side	TYPE D
11	F−T	VCO input	Local input for transmission	TYPE F
12	TON	Output port	This is controlled by the input data	TYPE D
13	P−T			
14	TPD	Phase comparator output	This is LO if the locally divided value is higher than the reference frequency, HI if it is lower, and Z if it matches.	TYPE E
15	V_{DD}	Power supply	2.5～5.5V	

QD01:CS4396

Pin Description

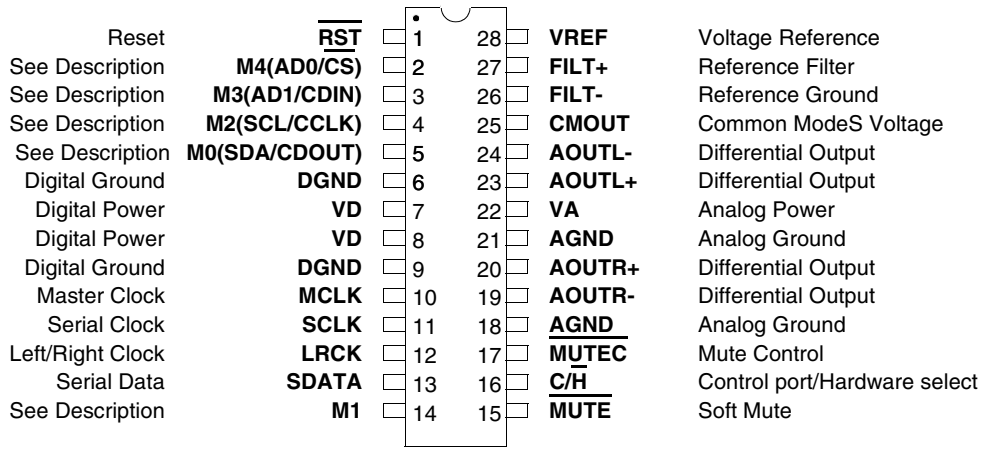

Pin Description

PIN	Pin Name	Type	Description	Sourde/Dest
CDDSP interface				
1	CD_LRCK	I	DSP Interface left/right Clock	From DSP
3	CD_SDI	I	DSP interface serial data	From DSP
2	CD_BCK	I	DSP interface bit clock	From DSP
SDI interface				
9	BS_SDI	I	Bitstream interface serial data	From MCU
7	BS_LRCK	I	Bitstream interface left/right Clock	From MCU
8	BS_BCK	I	Bitstream interface clock	From MCU
4	DREQ	O	Bitstream data request	To MCU
PCM IN interface				
13	BCKI	I	ADC bit clock	From ADC
14	SDI	I	ADC serial data	From ADC
12	LRCKI	I	ADC left/right Clock	From ADC
PCM OUT interface				
20	LRCKO	O	DAC Interface left/right Clock	To DAC
22	SDO	O	DAC serial data	To DAC
21	BCKO	O	DAC bit clock	To DAC
19	OSCK	O	DAC oversampling clock	To DAC/ADC
GPSO interface				
55	GPSO_CK	I	GPSO bit clock	From MCU
54	GPSO_SDO	O	GPSO serial data	To MCU
56	GPSO_REQ	O	GPSO request signal	To MCU
GPIO interface				
26	IODATA0	I/O	GPIODATA0	
27	IODATA1	I/O	GPIODATA1	
28	IODATA2	I/O	GPIODATA2	
31	IODATA3	I/O	GPIODATA3	
32	IODATA4	I/O	GPIODATA4	
33	IODATA5	I/O	GPIODATA5	
34	IODATA6	I/O	GPIODATA6	
35	IODATA7	I/O	GPIODATA7	
44	IODATA8	I/O	GPIODATA8	
45	IODATA9	I/O	GPIODATA9	
46	IODATA10	I/O	GPIODATA10	
47	IODATA11	I/O	GPIODATA11	
48	IODATA12	I/O	GPIODATA12	
49	IODATA13	I/O	GPIODATA13	
50	IODATA14	I/O	GPIODATA14	
51	IODATA15	I/O	GPIODATA15	

PIN	Pin Name	Type	Description	Sourde/Dest
			HANDSHAKE SIGNALS	
60	STB	I	Strobe signal	From MCU
59	RQST	O	I2C data signal	To MCU
			I^2C LINK	
63	SCL	I	I2C clock signal	From MCU
64	SDA	I/O	I2C data signal	To MCU
			MISCELLANEOUS	
17	XTI	I	Oscillator input	
18	XTO	O	Oscillator output	
25	CLKOUT	O	Buffered output clock	
15	-RESET	I	Reset	
16	-TESTEN	I	Reserved for test purpose	
40	FILT0	I	PLL external filter	
38	FILT1		PLL external filter	
			POWER SUPPLY	
39	PLL_VCC			
41	PLL_GND			
5	VDD_1		Digital supply (2.5V Power Supply)	
10	VDD_2		Digital supply (2.5V Power Supply)	
29	VDD_3		Digital supply (2.5V Power Supply)	
36	VDD_4		Digital supply (2.5V Power Supply)	
53	VDD_5		Digital supply (2.5V Power Supply)	
62	VDD_6		Digital supply (2.5V Power Supply)	
23	VCC_1		Digital supply (3.3V Power Supply)	
42	VCC_2		Digital supply (3.3V Power Supply)	
58	VCC_3		Digital supply (3.3V Power Supply)	
6	VSS_1			
11	VSS_2			
24	VSS_3			
30	VSS_4			
37	VSS_5			
43	VSS_6			
52	VSS_7			
57	VSS_8			
61	VSS_9			

Pin Assignment

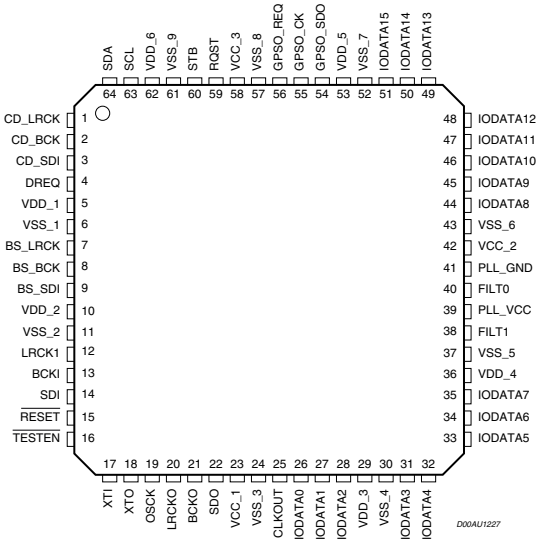

Pin Description

SYMBOL	PIN	DESCRIPTION
HFREF	1	comparator common mode input
HFIN	2	comparator signal input
ISLICE	3	current feedback output from data slicer
V_{SSA1}	4[1]	analog ground 1
V_{DDA1}	5[1]	analog supply voltage 1
I_{ref}	6	reference current output pin
V_{RIN}	7	reference voltage for servo ADC's
D1	8	unipolar current input (central diode signal input)
D2	9	unipolar current input (central diode signal input)
D3	10	unipolar current input (central diode signal input)
D4	11	unipolar current input (central diode signal input)
R1	12	unipolar current input (satellite diode signal input)
R2	13	unipolar current input (satellite diode signal input)
V_{SSA2}	14[1]	analog ground 2
CROUT	15	crystal/resonator output
CRIN	16	crystal/resonator input
V_{DDA2}	17[1]	analog supply voltage 2
LN	18	DAC left channel differential output - negative
LP	19	DAC left channel differential output - positive
V_{neg}	20[1]	DAC negative reference supply (equivalent to DAC V_{SS})
V_{pos}	21[1]	DAC positive reference supply (equivalent to DAC V_{DD})
RN	22	DAC right channel differential output - negative
RP	23	DAC right channel differential output - positive
SELPLL	24	selects whether internal clock multiplier PLL is used
TEST1	25	test control input 1; this pin should be tied LOW
CL16	26	16.9344 MHz system clock output
DATA	27	serial data output (3-state)
WCLK	28	word clock output (3-state)
SCLK	29	serial bit clock output (3-state)
EF	30	C2 error flag output (3-state)
TEST2	31	test control input 2; this pin should be tied LOW
KILL	32	kill output (programmable; open-drain)
V_{SSD1}	33[1]	digital ground 2
V2/V3	34	versatile I/O: input versatile pin 2 or output versatile pin 3 (open-drain)
WCLI	35	word clock input (for data loopback to DAC)
SDI	36	serial data input (for data loopback to DAC)
SCLI	37	serial bit clock input (for data loopback to DAC)
$\overline{RESET}$	38	power-on reset input (active LOW)
SDA	39	microcontroller interface data I/O line (open-drain output)
SCL	40	microcontroller interface clock line input
RAB	41	microcontroller interface R/$\overline{W}$ and load control line input (4-wire bus mode)
SILD	42	microcontroller interface $\overline{R}$/W and load control line input (4-wire bus mode)
STATUS	43	servo interrupt request line/decoder status register output (open-drain)
TEST3	44	test control input 3; this pin should be tied LOW
RCK	45	subcode clock input
SUB	46	P-to-W subcode bits output (3-state)
SFSY	47	subcode frame sync output (3-state)
SBSY	48	subcode block sync output (3-state)
CL11/4	49	11.2896 MHz or 4.2336 MHz (for microcontroller) clock output
V_{SSD2}	50[1]	digital ground 3
DOBM	51	bi-phase mark output (externally buffered; 3-state)
$V_{DDD1(P)}$	52[1]	digital supply voltage 2 for periphery
CFLG	53	correction flag output (open-drain)
RA	54	radial actuator output
FO	55	focus actuator output
SL	56	sledge control output
$V_{DDD2(C)}$	57[1]	digital supply voltage 3 for core
V_{SSD3}	58[1]	digital ground 4
MOTO1	59	motor output 1; versatile (3-state)
MOTO2	60	motor output 2; versatile (3-state)
V4	61	versatile output pin 4
V5	62	versatile output pin 5
V1	63	versatile input pin 1
LDON	64	laser drive on output (open-drain)

Note

1. All supply pins must be connected to the same external power supply voltage

QY01:μPD784216A

Pin No.	Port Name	I/O	Signal Name	Pull up	Initial	Remarks
1	P120/RTP0	O	n.c.		L	n.c.
2	P121/RTP1	O	n.c.		L	n.c.
3	P122/RTP2	O	n.c.		L	n.c.
4	P123/RTP3	O	n.c.		L	n.c.
5	P124/RTP4	O	n.c.		L	n.c.
6	P125/RTP5	O	n.c.		L	n.c.
7	P126/RTP6	O	n.c.		L	n.c.
8	P127/RTP7	O	n.c.		L	n.c.
9	VDD		+3.3V			Power +3.3V
10	X2	I	5MHz			Main system clock 5MHz
11	X1	I	5MHz			Main system clock 5MHz
12	VSS		GND			GND
13	XT2		n.c.			n.c.
14	XT1		GND			GND
15	/RESET	I	CPU_RES			Reset active low
16	P00/INTP0	I	IR	int.		RC-5 signal in
17	P01/INTP1	I	MP_RQST	int.		from STA016T
18	P02/INTP2/NMI	I	HFD	int.		from HF Detector
19	P03/INTP3	I	TXT_REQ	int.		from LC89170M
20	P04/INTP4	I	ENC_A	int.		Rotary Encoder A signal(C.W)
21	P05/INTP5	I	ENC_B	int.		Rotary Encoder B signal(C.C.W)
22	P06/INTP6	I	n.c.	int.		
23	AVDD		+3.3V			Power +3.3V
24	AVREF0		+3.3V			A/D reference
25	P10/ANI0	I	KIN_1	ext.		A/D 4-key input
26	P11/ANI1	I	KIN_2	ext.		A/D 4-key input
27	P12/ANI2	I	KIN_3	ext.		A/D 4-key input
28	P13/ANI3	I	KIN_4	ext.		A/D 4-key input
29	P14/ANI4	I	KIN_5	ext.		A/D 4-key input
30	P15/ANI5	I	GND			GND
31	P16/ANI6	I	GND			GND
32	P17/ANI7	I	GND			GND
33	AVSS		GND			GND
34	P130/ANO0	I	GND			GND
35	P131/ANO1	I	GND			GND
36	AVREF1		+3.3V			D/A reference
37	P70/RXD2/SI2	O	DIS_CE	int.	L	Latch for LC7571x
38	P71/TXD2/SO2	O	DIS_SDA	int.	L	Data for LC7571x
39	P72/ASCK2/SCK2	O	DIS_SCL	int.	L	Clock for LC7571x
40	P20/RXD1/SI1	I	RXD			for PcLink
41	P21/TXD1/SO1	O	TXD			for PcLink
42	P22/ASCK1/SCK1	O	n.c.		L	
43	P23/PCL	O	n.c.		L	
44	P24/BUZ	O	n.c.		L	
45	P25/SI0/SDA0	I	TXT_SDA	int.		Data for LC89170M
46	P26/SO0	O	n.c.		L	
47	P27/SCK0/SCL0	O	TXT_SCK	int.	L	Clock for LC89170M
48	P80/A0	O	n.c.		L	n.c.
49	P81/A1	O	n.c.		L	n.c.
50	P82/A2	O	n.c.		L	n.c.
51	P83/A3	O	n.c.		L	n.c.
52	P84/A4	O	n.c.		L	n.c.
53	P85/A5	O	n.c.		L	n.c.

Pin No.	Port Name	I/O	Signal Name	Pull up	Initial	Remarks
54	P86/A6	O	n.c.		L	n.c.
55	P87/A7	O	n.c.		L	n.c.
56	P40/AD0	I/O	CD_SDA	ext.	H	Data for CD10/MB15U10
57	P41/AD1	O	CD_SCL	ext.	H	Clock for CD10/MB15U10
58	P42/AD2	O	CD_SILD	int.	H	Latch for CD10 servo part
59	P43/AD3	O	CD_RAB	int.	L	Latch for CD10 decoder part
60	P44/AD4	O	PLL_CS	int.	L	CS for MB15U10
61	P45/AD5	O	CD_RES	int.	L	Reset for CD10/LC89170M
62	P46/AD6	O	DIS_RES	int.	L	Reset for LC7571x
63	P47/AD7	O	MP_RES	int.	L	Reset for STA016T
64	P50/A8	O	MP_STB	int.	L	Strobe for STA016T
65	P51/A9	I/O	IIC_SDA	ext.	L	Data for STA016T/AT24C4
66	P52/A10	O	IIC_SCL	ext.	L	Clock for STA016T/AT24C4
67	P53/A11	O	TRAY_CONT	ext.	HighZ	Tray in/out control
68	P54/A12	I	LOAD_SW	ext.		Tray loading sw Low active
69	P55/A13	O	SMUTE	int.	L	Soft mute for DAC
70	P56/A14	O	n.c.		L	n.c.
71	P57/A15	O	n.c.		L	n.c.
72	VSS		GND			GND
73	P60/A16	O	n.c.		L	n.c.
74	P61/A17	O	n.c.		L	n.c.
75	P62/A18	O	n.c.		L	n.c.
76	P63/A19	O	n.c.		L	n.c.
77	P64/RD	O	n.c.		L	n.c.
78	P65/WR	O	n.c.		L	n.c.
79	P66/WAIT	I	MP3_EN	int.	L	MP3 Enable = Open MP3 Disable = LOW
80	P67/ASTB	O	MOT_SW	int.	L	Spindle Free RUN Active HIGH
81	VDD		+3.3V			Power +3.3V
82	P100/TI5/TO5	O	n.c.		L	n.c.
83	P101/TI6/TO6	O	n.c.		L	n.c.
84	P102/TI7/TO7	O	n.c.		L	n.c.
85	P103/TI8/TO8	O	n.c.		L	n.c.
86	P30/TO0	O	n.c.		L	n.c.
87	P31/TO1	O	n.c.		L	n.c.
88	P32/TO2	O	n.c.		L	n.c.
89	P33/TI1	O	n.c.		L	n.c.
90	P34/TI2	O	n.c.		L	n.c.
91	P35/TI00	O	n.c.		L	n.c.
92	P36/TI01	O	n.c.		L	n.c.
93	P37/EXA	O	n.c.		L	n.c.
94	TEST		GND			GND
95	P90	O	S_PLAY	ext.	H	LED L active
96	P91	O	FL_OFF	ext.	H	LED L active
97	P92	O	n.c.		L	n.c.
98	P93	O	n.c.		L	n.c.
99	P94	O	n.c.		L	n.c.
100	P95	O	n.c.		L	n.c.

8. EXPLODED VIEW AND PARTS LIST

SYMBOL	STYLE	PARTS NAME
5110		+B. H. M. SCREW
5126		+B. H. TAPTITE SCREW W/WASHER
5127		+P. H. TAPTITE SCREW(B TYPE)
5128		+B. H. TAPTITE SCREW(B TYPE)
5129		+B. H. TAPTITE SCREW(W/T. L. WASHER)
5405		TOOTHED LOCK WASHERS

MARK	MATERIAL/FINISH
(M)	STEEL/COPPER
(U)	STEEL/BLACK

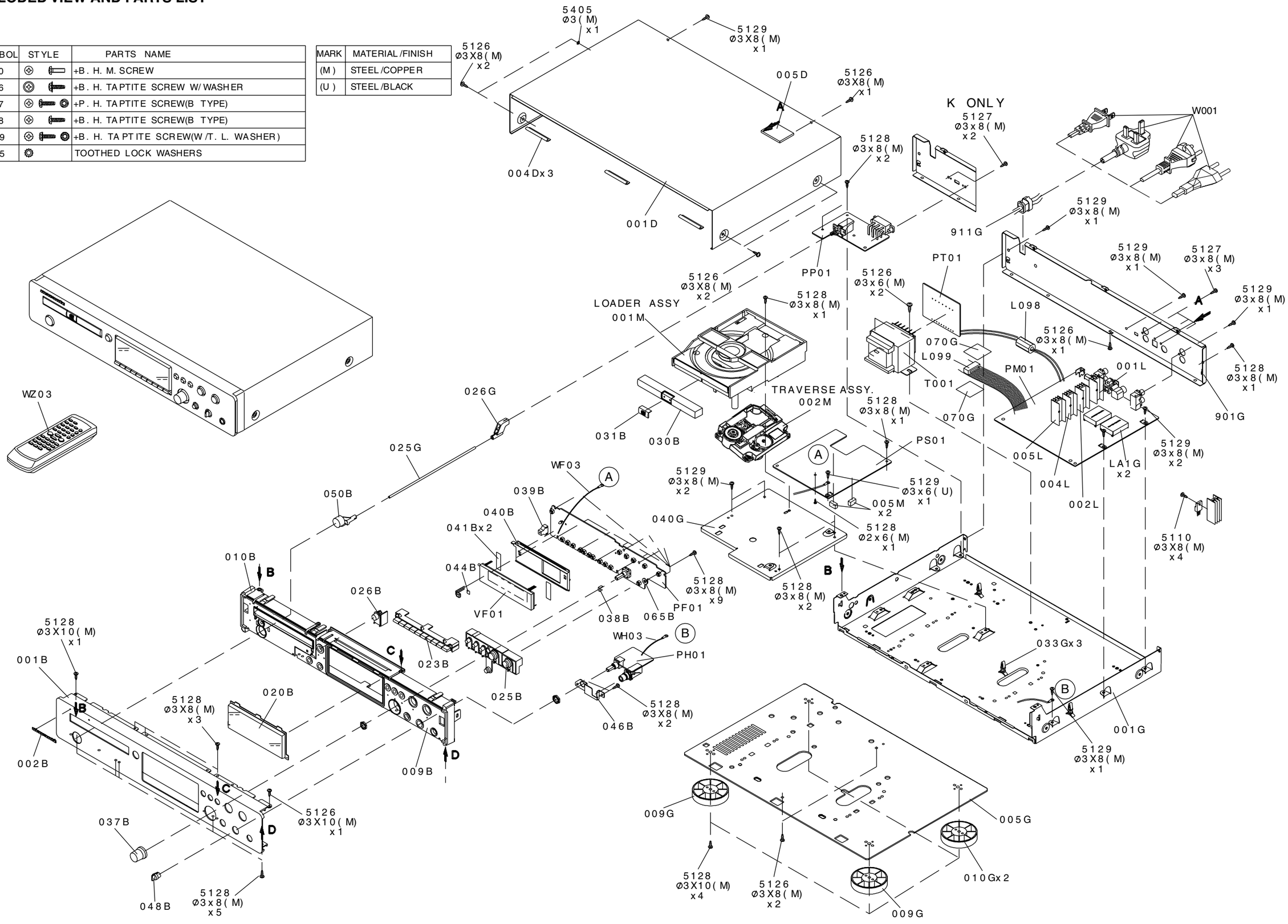

POS. NO	VERS. COLOR	PART NO. (FOR EUR)	DESCRIPTION	PART NO. (MJI)
001B	BLACK	05AK248010	FRONT PANEL AL BLACK	05AK248010
001B	GOLD	05AK248110	FRONT PANEL AL GOLD	05AK248110
002B		185J251010	MARANTZ BADGE BL PAINTED	185J251010
009B	BLACK	383K105020	FRONT CHASSIS PL RIGHT BLACK	383K105020
009B	GOLD	05AK105110	FRONT CHASSIS PL RIGHT GOLD	05AK105110
010B	BLACK	385K105010	FRONT CHASSIS PL LEFT BLACK	385K105010
010B	GOLD	05AK105210	FRONT CHASSIS PL LEFT GOLD	05AK105210
020B		05AK158010	WINDOW PINK SMOKE	05AK158010
023B		05AK270020	BUTTON 10 KEY	05AK270020
025B	BLACK	383K270040	BUTTON PLAY STOP BLACK	383K270040
025B	GOLD	05AK270140	BUTTON PLAY STOP GOLD	05AK270140
026B	BLACK	383K270020	BUTTON OPEN/CLOSE BLACK	383K270020
026B	GOLD	05AK270130	BUTTON OPEN/CLOSE GOLD	05AK270130
030B	BLACK	05AK063010	ESCUTCHEON BLACK	05AK063010
030B	GOLD	05AK063110	ESCUTCHEON GOLD	05AK063110
031B		05AK251010	BADGE ESCUTCHEON	05AK251010
037B	BLACK	386K154010	JOG KNOB BLACK	386K154010
037B	GOLD	05AK154110	JOG KNOB GOLD	05AK154110
048B	BLACK	284T154310	KNOB HEADPHONE VOLUME BLACK	284T154310
048B	GOLD	284T154250	KNOB HEADPHONE VOLUME GOLD	284T154250
050B	BLACK	05AK270010	BUTTON POWER BLACK	05AK270010
050B	GOLD	05AK270110	BUTTON POWER GOLD	05AK270110
009G		183J057010	LEG (GOLD HOT STAMP) FRONT	183J057010
010G		183J057110	LEG (GOLD HOT STAMP) REAR	183J057110
026G		376K121010	LINK POWER SW	376K121010
001M		05AK304500	MECHA LOADER ASSY VAL2212 08	05AK304500
002M		05AK304510	MECHA TRAVERSE ASSY VAM2202 08	05AK304510
L098		FC50270040	FERRITE CORE USB-4 TRANS-MAIN	FC50270040
L099		FC90280010	FERRITE CORE HF70SH28X2X10 SERVO-MAIN	FC90280010
⚠ W001	/C	nsp	MAINS CORD KOREA 3A 250V	YC02000820
⚠ W001	/F	nsp	MAINS CORD F HVFF 2X1.25	YC01800940
⚠ W001	/K	nsp	MAINS CORD CCEE APP. (AC250V 10A)+ VAR2P	YC01800880
⚠ W001	/N	YC01800790	MAINS CORD N (MAYOR)	YC01800790
⚠ W001	/S	nsp	MAINS CORD BS WITH VAR-2	YC01800930
WF01		nsp	FFC (JF01-JY01)	YU20110520
WM01		nsp	FFC (J150-J103)	YU24140520
			PACKING	
001T	/F	nsp	USER GUIDE CD7300 F	05AK851110
001T	/K/S	nsp	USER GUIDE CD7300(ENG/CHI)	05AK851350
001T	/C	nsp	USER GUIDE CD7300(C)	05AK851210
001T	/N	05AK851250	USER GUIDE CD7300(N)	05AK851250
009T	/F	nsp	USER MANUAL ADDRESS SHEET	416K851130
WZ03		ZK05AK0010	REMOTE CONTROLLER RC7300CD	ZK05AK0010
			NOT STANDARD SPARE PARTS	
001D	BLACK	nsp	LID TOP COVER BLACK	349K257020
001D	GOLD	nsp	LID TOP COVER GOLD	349K257120
001S		nsp	PACKING CASE	05AK801010
002S		nsp	CUSHION	386K809010

NOTE : "nsp" PART IS LISTED FOR REFERENCE ONLY, MARANTZ WILL NOT SUPPLY THESE PARTS.

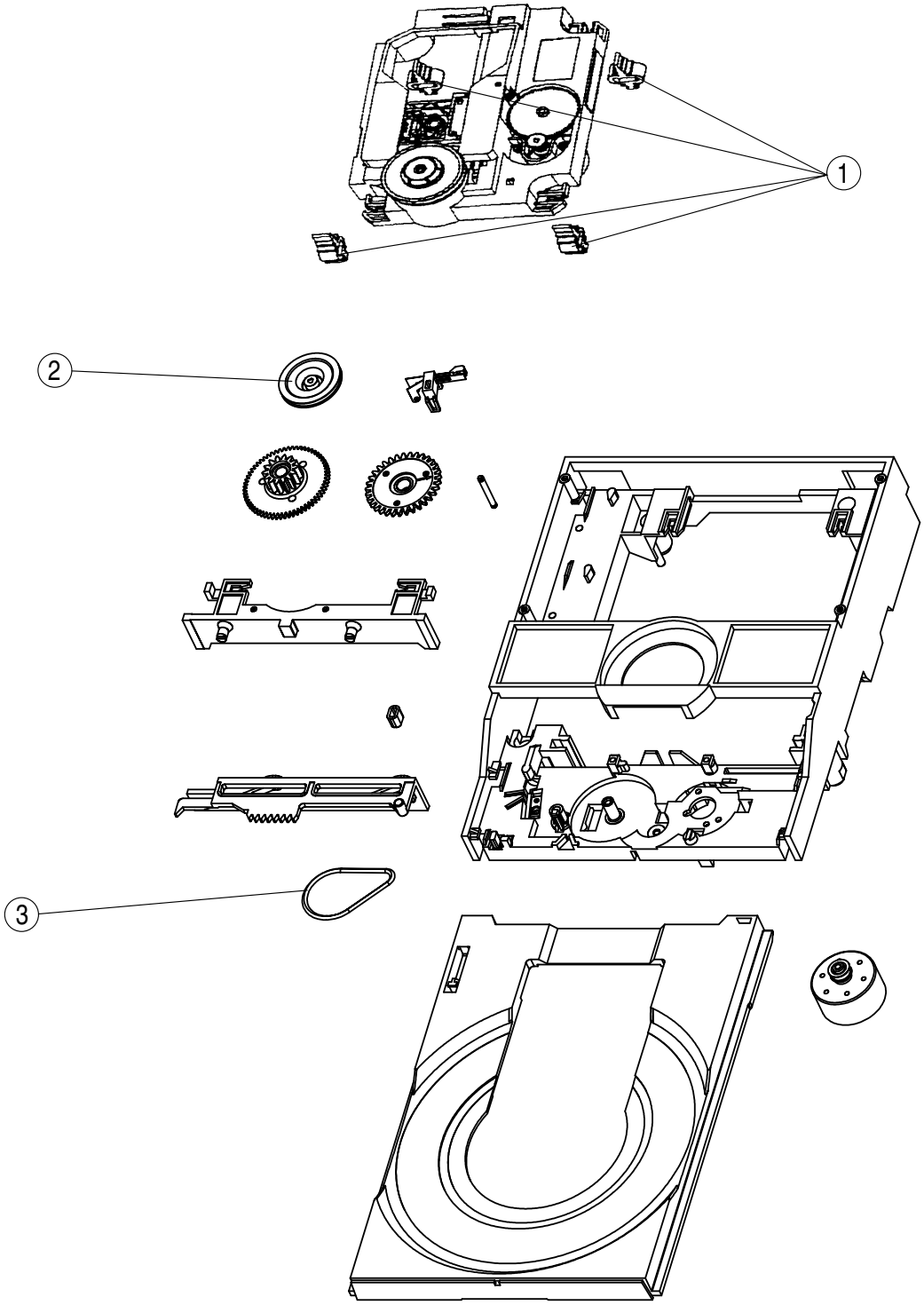

POS. NO	VERS. COLOR	PART NO. (FOR EUR)	DESCRIPTION	PART NO. (MJI)
1		QP40410986	SUSPENSION(4822 404 10986)	QP40410986
2		QP40111709	CLAMPER(4822 401 11709)	QP40111709
3		QP35810266	BELT(4822 358 10266)	QP35810266

NOTE : "nsp" PART IS LISTED FOR REFERENCE ONLY, MARANTZ WILL NOT SUPPLY THESE PARTS.

12. ELECTRICAL PARTS LIST

ASSIGNMENT OF COMMON PARTS CODES.

RESISTORS

R✱✱✱: 1) GD05×××140, Carbon film fixed resistor, ±5% 1/4W
R✱✱✱: 2) GD05×××160, Carbon film fixed resistor, ±5% 1/6W
① —— Resistance value

Examples ;
① Resistance value

0.1 Ω 001	10 Ω 100	1 kΩ 102	100 kΩ 104
0.5 Ω 005	18 Ω 180	2.7 kΩ 272	680 kΩ 684
1 Ω 010	100 Ω 101	10 kΩ 103	1 MΩ 105
6.8 Ω 068	390 Ω 391	22 kΩ 223	4.7 MΩ 475

Note : Please distinguish 1/4W from 1/6W by the shape of parts used actually.

CAPACITORS

C✱✱✱: CERAMIC CAP.
3) DD1××××370, Ceramic capacitor
Disc type
Temp.coeff.P350 ～N1000, 50V
② ③
③ —— Capacity value
② —— Tolerance

Examples ;
② Tolerance (Capacity deviation)
±0.25 pF 0
±0.5 pF 1
±5% 5

✱ Tolerance of COMMON PARTS handled here are as follows :
0.5 pF～ 5 pF .... ±0.25 pF
6 pF～ 10 pF .... ±0.5 pF
12 pF～ 560 pF .... ±5%

③ Capacity value

0.5 pF 005	3 pF 030	100 pF 101
1 pF 010	10 pF 100	220 pF 221
1.5 pF 015	47 pF 470	560 pF 561

C✱✱✱ : CERAMIC CAP.
4) DK16×××300, High dielectric constant ceramic capacitor
Disc type
Temp.chara. 2B4, 50V
④
④ —— Capacity value

Examples ;
④ Capacity value

100 pF 101	1000 pF 102	10000 pF 103
470 pF 471	2200 pF 222	

C✱✱✱ : 5) ELECTROLY CAP. ( ), 6) FILM CAP. ( )
5) EA××××××10, Electrolytic capacitor
One-way lead type, Tolerance ±20%
⑤ ⑥
⑥ —— Working voltage
⑤ —— Capacity value

Examples ;
⑤ Capacity value

0.1 μF 104	4.7 μF 475	100 μF 107
0.33 μF 334	10 μF 106	330 μF 337
1 μF 105	22 μF 226	1100 μF 118
		2200 μF 228

⑥ Working voltage

6.3V 006	25V 025
10V 010	35V 035
16V 016	50V 050

6) DF15×××350 → Plastic film capacitor
DF15×××310 → One-way type, Mylar ±5% 50V
DF16×××310 → Plastic film capacitor
One-way type, Mylar ±10% 50V
⑦
⑦ —— Capacity value

Examples ;
⑦ Capacity value

0.001 μF (1000 pF) 102	0.1 μF 104
0.0018 μF 182	0.56 μF 564
0.01 μF 103	1 μF 105
0.015 μF 153	

NOTE : 1) The above CODES (R✱✱✱ , R✱✱✱ , C✱✱✱ , C✱✱✱ and C ✱✱✱) are omitted on the schematic diagram in some case.
2) On the occasion, be confirmed the common parts on the parts list.
3) Refer to "Common Parts List" for the other common parts (**RI05**, **DD4**, **DK4**).

NOTE ON SAFETY FOR FUSIBLE RESISTOR :

The suppliers and their type numbers of fusible resistors are as follows;

1. KOA Corporation

Part No. (MJI)	Type No. (KOA)	Description
NH05×××140 →	RF25S××××ΩJ	(±5% 1/4W)
NH05×××120 →	RF50S××××ΩJ	(±5% 1/2W)
NH85×××110 →	RF73B2A××××ΩJ	(±5% 1/10W)
NH95×××140 →	RF73B2E××××ΩJ	(±5% 1/4W)

✱ Resistance value — Resistance value (0.1 Ω – 10 kΩ)

2. Matsushita Electronic Components Co., Ltd

Part No. (MJI)	Type No. (MEC)	Description
NF05×××140 →	ERD-2FCJ×××	(±5% 1/4W)
RF05×××140		
NF02×××140 →	ERD-2FCG×××	(±2% 1/4W)
RF02×××140		

✱Resistance value — ✱Resistance value

Examples ;
✱ Resistance value

0.1 Ω 001	10 Ω 100	1 kΩ 102	100 kΩ 104
0.5 Ω 005	18 Ω 180	2.7 kΩ 272	680 kΩ 684
1 Ω 010	100 Ω 101	10 kΩ 103	1 MΩ 105
6.8 Ω 068	390 Ω 391	22 kΩ 223	4.7 MΩ 475

ABBREVIATION AND MARKS

ANT.	: ANTENNA	BATT.	: BATTERY
CAP.	: CAPACITOR	CER.	: CERAMIC
CONN.	: CONNECTING	DIG.	: DIGITAL
HP	: HEADPHONE	MIC.	: MICROPHONE
μ-PRO	: MICROPROCESSOR	REC.	: RECORDING
RES.	: RESISTOR	SPK	: SPEAKER
SW	: SWITCH	TRANSF.	: TRANSFORMER
TRIM.	: TRIMMING	TRS.	: TRANSISTOR
VAR.	: VARIABLE	X'TAL	: CRYSTAL

NOTE ON FUSE :

Regarding to all parts of parts code **FS20**xxx**2**xx, replace only with Wickmann-Werke GmbH, Type 372 non glass type fuse.

NOTE ON SAFETY :

Symbol ⚠ Fire or electrical shock hazard. Only original parts should be used to replaced any part marked with symbol ⚠ . Any other component substitution (other than original type), may increase risk of fire or electrical shock hazard.

安全上の注意：

⚠がついている部品は、安全上重要な部品です。必ず指定されている部品番号の部品を使用して下さい。

010728MIT

POS. NO	VERS. COLOR	PART NO. (FOR EUR)	DESCRIPTION	PART NO. (MJI)
			PF01-FRONT CIRCUIT BOARD	
			PF01-CAPACITORS	
CF01		nsp	CER. CHIP 0.1µF GRM39F104Z16	DK98104200
CF02		nsp	CER. CHIP 0.1µF GRM39F104Z16	DK98104200
CF03		nsp	CER. CHIP 27pF	DD95270300
CF04		nsp	CER. CHIP 0.047µF	DK98473300
CF05		nsp	CER. CHIP 0.01µF	DK98103300
CF11		nsp	CER. CHIP 0.01µF	DK98103300
CF12		nsp	CER. CHIP 100pF ±5% CG 50V	DD95101300
CF13		nsp	CER. CHIP 100pF ±5% CG 50V	DD95101300
CF14		nsp	CER. CHIP 22pF ±5% CG 50V	DD95220300
CF15		nsp	CER. CHIP 100pF ±5% CG 50V	DD95101300
CR01		nsp	ELECT. 100µF M 10V RA-2	OA10701020
			PF01-RESISTORS	
RF01		nsp	CHIP 1kΩ ±5% 1/16W	NN05102610
RF03		nsp	CHIP 12kΩ ±5% 1/16W	NN05123610
RF04		nsp	CHIP 82kΩ ±5% 1/16W	NN05823610
RF05		nsp	CHIP 12kΩ ±5% 1/16W	NN05123610
RF06		nsp	CHIP 82kΩ ±5% 1/16W	NN05823610
RF07		nsp	CHIP 33kΩ ±5% 1/16W	NN05333610
RF08		nsp	CHIP 12kΩ ±5% 1/16W	NN05123610
RF09		nsp	CHIP 33kΩ ±5% 1/16W	NN05333610
RF10		nsp	CHIP 82kΩ ±5% 1/16W	NN05823610
RF11		nsp	CHIP 33kΩ ±5% 1/16W	NN05333610
RF12		nsp	CHIP 82kΩ ±5% 1/16W	NN05823610
RF13		nsp	CHIP 12kΩ ±5% 1/16W	NN05123610
RF14		nsp	CHIP 82kΩ ±5% 1/16W	NN05823610
RF15		nsp	CHIP 33kΩ ±5% 1/16W	NN05333610
RF16		nsp	CHIP 12kΩ ±5% 1/16W	NN05123610
RF17		nsp	CHIP 10kΩ ±5% 1/16W	NN05103610
RF18		nsp	CHIP 10kΩ ±5% 1/16W	NN05103610
RF19		nsp	CHIP 10kΩ ±5% 1/16W	NN05103610
RF21		nsp	CHIP 33kΩ ±5% 1/16W	NN05333610
RF22		nsp	CHIP 15kΩ ±5% 1/16W	NN05153610
RF24		nsp	CHIP 220Ω ±5% 1/16W	NN05221610
RF29		nsp	CHIP 10kΩ ±5% 1/16W	NN05103610
RR01		nsp	CHIP 220Ω ±5% 1/16W	NN05221610
RR02		nsp	CHIP 220Ω ±5% 1/16W	NN05221610
RR03		nsp	CHIP 47kΩ ±5% 1/16W	NN05473610
			PF01-SEMICONDUCTORS	
DF02		HI10036080	L.E.D. RED SEL4117R-TP2	HI10036080
DR01		HW10004210	IR SENSOR RPM6936-V4	HW10004210
QF01		HC10416030	IC FL DRIVER LC75712NE	HC10416030
QR01		BA10026210	DIG. TRS. DTA114EU	BA10026210
QR02		HX100012A0	CHIP TRS. 2SA1586 (Y GR) 2SA1576A (Q R)	HX100012A0
			PF01-MISCELLANEOUS	
LF21		FN31000020	BLM11B252SD	FN31000020
LF22		FN31000020	BLM11B252SD	FN31000020
SF01 ∫ SF17		SP01013310	PUSH SW. SKQNAE H/5MM 160GF	SP01013310
SF18		SR03030030	ROTARY SW. EC11B	SR03030030
VF01		HQ31301920	ROT.ENCODER WITH PUSH.SW DISPLAY UNIT FTD CM2059C	HQ31301920
			PH01-HEAD PHONE CIRCUIT BOARD	
			PH01-CAPACITORS	
C901		nsp	CER. CHIP 220pF	DK96221300
C902		nsp	CER. CHIP 220pF	DK96221300
C903		nsp	ELECT. 100µF M 16V RA-2	OA10701620
C904		nsp	ELECT. 100µF M 16V RA-2	OA10701620
			PH01-RESISTORS	
R901		RM01031170	VARIABLE RK09L12B0 10K B(D-CUT REVERSE)	RM01031170

POS. NO	VERS. COLOR	PART NO. (FOR EUR)	DESCRIPTION	PART NO. (MJI)
R902		nsp	CHIP 100Ω ±5% 1/16W	NN05101610
R903		nsp	CHIP 100Ω ±5% 1/16W	NN05101610
R904		nsp	CHIP 100kΩ ±5% 1/16W	NN05104610
R905		nsp	CHIP 100kΩ ±5% 1/16W	NN05104610
R906		nsp	CHIP 12kΩ ±5% 1/16W	NN05123610
R907		nsp	CHIP 12kΩ ±5% 1/16W	NN05123610
R908		nsp	CHIP 15kΩ ±5% 1/16W	NN05153610
R909		nsp	CHIP 15kΩ ±5% 1/16W	NN05153610
R910 ∫ R913		nsp	CHIP 68Ω ±5% 1/16W	NN05680610
R914		nsp	CHIP 22Ω ±5% 1/16W	NN05220610
R915		nsp	CHIP 22Ω ±5% 1/16W	NN05220610
R991 ∫ R994		nsp	CHIP 2.2kΩ ±5% 1/16W	NN05222610
			PH01-SEMICONDUCTORS	
Q901		HC10045090	IC NJM-4556MB	HC10045090
Q991		HX342132A0	CHIP TRS. 2SC4213	HX342132A0
Q992		HX342132A0	CHIP TRS. 2SC4213	HX342132A0
Q993		HX342132A0	CHIP TRS. 2SC4213	HX342132A0
Q994		HX342132A0	CHIP TRS. 2SC4213	HX342132A0
			PH01-MISCELLANEOUS	
J901		YJ01003870	H.P JACK HLJ0540-01-410 BLACK	YJ01003870
L901		FN31000020	BLM11B252SD	FN31000020
L902		FN31000020	BLM11B252SD	FN31000020
			PM01-MAIN CIRCUIT BOARD	
			PM01-CAPACITORS	
C301 ∫ C304		OF15561540	FILM APSV 561J 560pF 100V PP	OF15561540
C307 ∫ C310		OF15151540	FILM 150pF 100V J APSV	OF15151540
C311 ∫ C314		nsp	ELECT. 220µF/16V ARA CERAFINE	OA22701650
C401		OF15182540	FILM APSV 182J 1800pF 100V PP	OF15182540
C402		OF15182540	FILM APSV 182J 1800pF 100V PP	OF15182540
C403		OF15102540	FILM 1000pF J 100V APSV	OF15102540
C404		OF15102540	FILM 1000pF J 100V APSV	OF15102540
C405		OF15471540	FILM APSV 471J 470pF 100V PP	OF15471540
C406		OF15471540	FILM APSV 471J 470pF 100V PP	OF15471540
C411 ∫ C414		nsp	ELECT. 220µF/16V ARA CERAFINE	OA22701650
C601		nsp	ELECT. 220µF 16V ARS	OA22701640
C602		nsp	ELECT. 220µF 16V ARS	OA22701640
C807		nsp	CER. CHIP 0.1µF GRM39F104Z16	DK98104200
C816		nsp	CER. CHIP 0.01µF	DK98103300
C818		nsp	CER. CHIP 0.01µF	DK98103300
C819		nsp	ELECT. 10µF M 16V RA-2	OA10601620
C823		nsp	ELECT. 470µF M 10V RA-2	OA47701020
C824		nsp	ELECT. 470µF M 10V RA-2	OA47701020
C825		nsp	ELECT. 470µF 16V M RA-2	OA47701620
C828		nsp	ELECT. 470µF M 10V RA-2	OA47701020
C829		nsp	ELECT. 6800µF 16V RA2	OA68801620
C830		nsp	ELECT. 470µF 16V M RA-2	OA47701620
C831		nsp	ELECT. 470µF M 50V RA-2	OA47705020
C832		nsp	ELECT. 1000µF 35V ARS SILMIC	OA10803540
C833		nsp	ELECT. 1000µF 35V ARS SILMIC	OA10803540
C834		nsp	ELECT. 100µF M 35V RA-2	OA10703520
C835		nsp	CER. CHIP 0.1µF GRM39F104Z16	DK98104200
C836		nsp	CER. CHIP 0.1µF GRM39F104Z16	DK98104200

NOTE : "nsp" PART IS LISTED FOR REFERENCE ONLY, MARANTZ WILL NOT SUPPLY THESE PARTS.

POS. NO	VERS. COLOR	PART NO. (FOR EUR)	DESCRIPTION	PART NO. (MJI)
CD01		nsp	CER. CHIP 0.1μF GRM39F104Z16	DK98104200
CD02		nsp	CER. CHIP 1μF 10V F	DK98105200
CD03		nsp	ELECT. 47μF M 16V RA-2	OA47601620
CD04		nsp	CER. CHIP 0.1μF GRM39F104Z16	DK98104200
CD05		nsp	ELECT. 47μF M 16V RA-2	OA47601620
CD06		nsp	CER. CHIP 0.1μF GRM39F104Z16	DK98104200
CD07		nsp	ELECT. 100μF 16V ARA	OA10701650
CD08		nsp	CER. CHIP 1μF 10V F	DK98105200
CD09		nsp	CER. CHIP 0.1μF GRM39F104Z16	DK98104200
CD10		nsp	CER. CHIP 1μF 10V F	DK98105200
CD14		nsp	ELECT. 100μF 10V ARA	OA10701050
CD16		nsp	CER. CHIP 0.1μF GRM39F104Z16	DK98104200
CD17		nsp	CER. CHIP 0.01μF	DK98103300
CD18		nsp	CER. CHIP 0.01μF	DK98103300
CD21 ~ CD24		nsp	CER. CHIP 4700pF ±10% B 50V	DK96472300
CD25		nsp	CER. CHIP 100pF ±5% CG 50V	DD95101300
CD26		nsp	CER. CHIP 100pF ±5% CG 50V	DD95101300
CD27		nsp	CER. CHIP 100pF ±5% CG 50V	DD95101300
CD28		nsp	CER. CHIP 10pF ±0.5pF CH 50V	DD91100300
CD29		nsp	CER. CHIP 0.1μF GRM39F104Z16	DK98104200
CD30		nsp	CER. CHIP 220pF	DK96221300
CD31		nsp	CER. CHIP 4700pF ±10% B 50V	DK96472300
CN01		nsp	ELECT. 1000μF M 16V RA-2	OA10801620
CN02		nsp	ELECT. 10μF M 16V RA-2	OA10601620
CN03		nsp	ELECT. 47μF M 16V RA-2	OA47601620
CN04		nsp	CER. CHIP 0.1μF GRM39F104Z16	DK98104200
CR91		nsp	CER. CHIP 220pF	DK96221300
CR92		nsp	CER. CHIP 0.1μF GRM39F104Z16	DK98104200
CT91		nsp	CER. CHIP 100pF ±5% CG 50V	DD95101300
CT92		nsp	ELECT. 10μF M 16V RA-2	OA10601620
CT93		nsp	CER. CHIP 4700pF ±10% B 50V	DK96472300
CT94		nsp	CER. CHIP 0.1μF GRM39F104Z16	DK98104200
CT95		nsp	CER. CHIP 0.1μF GRM39F104Z16	DK98104200
			PM01-RESISTORS	
R301 ~ R306		nsp	CHIP 1kΩ ±5% 1/16W	NN05102610
R307		nsp	CHIP 6.8kΩ ±5% 1/16W	NN05682610
R308		nsp	CHIP 6.8kΩ ±5% 1/16W	NN05682610
R309		nsp	CHIP 2.7kΩ ±5% 1/16W	NN05272610
R310		nsp	CHIP 2.7kΩ ±5% 1/16W	NN05272610
R311 ~ R314		nsp	CHIP 120Ω ±5% 1/16W	NN05121610
R315		nsp	CHIP 68Ω ±5% 1/16W	NN05680610
R316		nsp	CHIP 68Ω ±5% 1/16W	NN05680610
R317		nsp	CHIP 22Ω ±5% 1/16W	NN05220610
R318		nsp	CHIP 22Ω ±5% 1/16W	NN05220610
R319		nsp	CHIP 33kΩ ±5% 1/16W	NN05333610
R320		nsp	CHIP 33kΩ ±5% 1/16W	NN05333610
R321		nsp	CHIP 22Ω ±5% 1/16W	NN05220610
R322		nsp	CHIP 22Ω ±5% 1/16W	NN05220610
R323		nsp	CHIP 1kΩ ±5% 1/16W	NN05102610
R324		nsp	CHIP 1kΩ ±5% 1/16W	NN05102610
R325		nsp	CHIP 100Ω ±5% 1/16W	NN05101610
R326		nsp	CHIP 100Ω ±5% 1/16W	NN05101610
R327		nsp	CHIP 1kΩ ±5% 1/16W	NN05102610
R328		nsp	CHIP 1kΩ ±5% 1/16W	NN05102610
R333		nsp	CHIP 10kΩ ±5% 1/16W	NN05103610
R334		nsp	CHIP 10kΩ ±5% 1/16W	NN05103610
R401 ~ R406		nsp	CHIP 1kΩ ±5% 1/16W	NN05102610
R407 ~ R410		nsp	CHIP 120Ω ±5% 1/16W	NN05121610

POS. NO	VERS. COLOR	PART NO. (FOR EUR)	DESCRIPTION	PART NO. (MJI)
R411		nsp	CHIP 68Ω ±5% 1/16W	NN05680610
R412		nsp	CHIP 68Ω ±5% 1/16W	NN05680610
R413		nsp	CHIP 22Ω ±5% 1/16W	NN05220610
R414		nsp	CHIP 22Ω ±5% 1/16W	NN05220610
R415		nsp	CHIP 33kΩ ±5% 1/16W	NN05333610
R416		nsp	CHIP 33kΩ ±5% 1/16W	NN05333610
R417		nsp	CHIP 22Ω ±5% 1/16W	NN05220610
R418		nsp	CHIP 22Ω ±5% 1/16W	NN05220610
R419		nsp	CHIP 1kΩ ±5% 1/16W	NN05102610
R420		nsp	CHIP 1kΩ ±5% 1/16W	NN05102610
R421		nsp	CHIP 100Ω ±5% 1/16W	NN05101610
R422		nsp	CHIP 100Ω ±5% 1/16W	NN05101610
R423		nsp	CHIP 1kΩ ±5% 1/16W	NN05102610
R424		nsp	CHIP 1kΩ ±5% 1/16W	NN05102610
R601		nsp	CHIP 0Ω ±5% 1/16W	NN05000610
R602		nsp	CHIP 0Ω ±5% 1/16W	NN05000610
R603 ~ R606		nsp	CHIP 100Ω ±5% 1/16W	NN05101610
R607		nsp	CHIP 10kΩ ±5% 1/16W	NN05103610
R608		nsp	CHIP 10kΩ ±5% 1/16W	NN05103610
R609		nsp	CHIP 100kΩ ±5% 1/16W	NN05104610
R610		nsp	CHIP 100kΩ ±5% 1/16W	NN05104610
R611 ~ R614		nsp	CHIP 2.2kΩ ±5% 1/16W	NN05222610
R805		nsp	CHIP 68Ω ±5% 1/16W	NN05680610
R806		nsp	CHIP 68Ω ±5% 1/16W	NN05680610
R807		nsp	CHIP 100Ω ±5% 1/16W	NN05101610
R808		nsp	CHIP 100Ω ±5% 1/16W	NN05101610
⚠ R810		NH05022140	FUSIBLE 2.2Ω J 1/4W RADIAL	NH05022140
R811		nsp	CHIP 33Ω ±5% 1/16W	NN05330610
R881		nsp	CHIP 0Ω ±5% 1/16W	NN05000610
R882		nsp	CHIP 0Ω ±5% 1/16W	NN05000610
R883		nsp	CHIP 0Ω ±5% 1/16W	NN05000610
RD01		nsp	CHIP 1kΩ ±5% 1/16W	NN05102610
RD02		nsp	CHIP 47kΩ ±5% 1/16W	NN05473610
RD03		nsp	CHIP 47kΩ ±5% 1/16W	NN05473610
RD04		nsp	CHIP 47kΩ ±5% 1/16W	NN05473610
RD05		nsp	CHIP 10kΩ ±5% 1/16W	NN05103610
RD06		nsp	CHIP 47kΩ ±5% 1/16W	NN05473610
RD07		nsp	CHIP 10Ω ±5% 1/16W	NN05100610
RD08		nsp	CHIP 47kΩ ±5% 1/16W	NN05473610
RD09		nsp	CHIP 47kΩ ±5% 1/16W	NN05473610
RD10		nsp	CHIP 4.7kΩ ±5% 1/16W	NN05472610
RN01		nsp	CHIP 1kΩ ±5% 1/16W	NN05102610
RN02		nsp	CHIP 2.2kΩ ±5% 1/16W	NN05222610
RN03		nsp	CHIP 1kΩ ±5% 1/16W	NN05102610
RN04		nsp	CHIP 22kΩ ±5% 1/16W	NN05223610
RN05		nsp	CHIP 22kΩ ±5% 1/16W	NN05223610
RN07		nsp	CHIP 1kΩ ±5% 1/16W	NN05102610
RN08		nsp	CHIP 47kΩ ±5% 1/16W	NN05473610
RN09		nsp	CHIP 10kΩ ±5% 1/16W	NN05103610
RN10		nsp	CHIP 220kΩ ±5% 1/16W	NN05224610
RN11		nsp	CHIP 220kΩ ±5% 1/16W	NN05224610
RR91		nsp	CHIP 22Ω ±5% 1/16W	NN05220610
RT91		nsp	CHIP 100Ω ±5% 1/16W	NN05101610
RT93		nsp	CHIP 10Ω ±5% 1/16W	NN05100610
RT94		nsp	CHIP 22Ω ±5% 1/16W	NN05220610
			PM01-RESISTORS (COMMON)	
R***			CARBON FILM FIXED RES. ±5% 1/6W : R329-R332 R425-R428 R801-R804	
			PM01-SEMICONDUCTORS	
D301		HZ21005000	CHIP DIODE 1SS301 DAN202U	HZ21005000
D302		HZ21005000	CHIP DIODE 1SS301 DAN202U	HZ21005000

NOTE : "nsp" PART IS LISTED FOR REFERENCE ONLY, MARANTZ WILL NOT SUPPLY THESE PARTS.

POS. NO	VERS. COLOR	PART NO. (FOR EUR)	DESCRIPTION	PART NO. (MJI)
D303				
∫		HZ20018050	CHIP DIODE 1SS302	HZ20018050
D306				
D401		HZ21005000	CHIP DIODE 1SS301 DAN202U	HZ21005000
D402		HZ21005000	CHIP DIODE 1SS301 DAN202U	HZ21005000
D403				
∫		HZ20018050	CHIP DIODE 1SS302	HZ20018050
D406				
⚠ D801				
∫		HD20055100	DIODE SHOTTKY	HD20055100
⚠ D804			11EQS10 1A 100V	
⚠ D805		HD20002710	DIODE 1D3 1A/200V	HD20002710
⚠ D806		HD20002710	DIODE 1D3 1A/200V	HD20002710
D807		HZ30011020	CHIP DIODE MA8043M	HZ30011020
⚠ D808		HD20002710	DIODE 1D3 1A/200V	HD20002710
D810		HZ21005000	CHIP DIODE 1SS301 DAN202U	HZ21005000
D811		HZ30011020	CHIP DIODE MA8043M	HZ30011020
D813		nsp	DIODE	HD20002000
			1SS176 MA165 1SS254 30V 0.1A	
D814		nsp	DIODE	HD20002000
			1SS176 MA165 1SS254 30V 0.1A	
D815		HZ21005000	CHIP DIODE 1SS301 DAN202U	HZ21005000
D816		HZ30011020	CHIP DIODE MA8043M	HZ30011020
⚠ DN01				
∫		HD20002710	DIODE 1D3 1A/200V	HD20002710
⚠ DN04				
DN05		HZ30011020	CHIP DIODE MA8043M	HZ30011020
DN09		HZ30471000	CHIP DIODE MA8047-M 4.7V	HZ30471000
Q301		HF203691B0	F.E.T.	HF203691B0
			2SK369 BL VGDS-40V PD0.4W	
Q302		HF203691B0	F.E.T.	HF203691B0
			2SK369 BL VGDS-40V PD0.4W	
Q303		HX328731B0	CHIP TRS. 2SC2873 (Y)	HX328731B0
Q304		HX328731B0	CHIP TRS. 2SC2873 (Y)	HX328731B0
Q305				
∫		HX113121B0	CHIP TRS. 2SA1312 (B)	HX113121B0
Q308				
Q309		HX333241B0	CHIP TRS. 2SC3324 (B)	HX333241B0
Q310		HX333241B0	CHIP TRS. 2SC3324 (B)	HX333241B0
Q311		HF201701H0	F.E.T. 2SK170 V RANK	HF201701H0
Q312		HF201701H0	F.E.T. 2SK170 V RANK	HF201701H0
Q313		HF100741H0	F.E.T. 2SJ74 V RANK	HF100741H0
Q314		HF100741H0	F.E.T. 2SJ74 V RANK	HF100741H0
Q315		HF203691B0	F.E.T.	HF203691B0
			2SK369 BL VGDS-40V PD0.4W	
Q316		HF203691B0	F.E.T.	HF203691B0
			2SK369 BL VGDS-40V PD0.4W	
Q401		HF203892A0	F.E.T. 2SK389 GR OR BL	HF203892A0
Q402		HF203892A0	F.E.T. 2SK389 GR OR BL	HF203892A0
Q403		HX328731B0	CHIP TRS. 2SC2873 (Y)	HX328731B0
Q404		HX328731B0	CHIP TRS. 2SC2873 (Y)	HX328731B0
Q405				
∫		HX113121B0	CHIP TRS. 2SA1312 (B)	HX113121B0
Q408				
Q409		HX333241B0	CHIP TRS. 2SC3324 (B)	HX333241B0
Q410		HX333241B0	CHIP TRS. 2SC3324 (B)	HX333241B0
Q411		HF201701H0	F.E.T. 2SK170 V RANK	HF201701H0
Q412		HF201701H0	F.E.T. 2SK170 V RANK	HF201701H0
Q413		HF100741H0	F.E.T. 2SJ74 V RANK	HF100741H0
Q414		HF100741H0	F.E.T. 2SJ74 V RANK	HF100741H0
Q601				
∫		HX342132A0	CHIP TRS. 2SC4213	HX342132A0
Q604				
Q801		HC3890509F	IC REG. NJM7805FA +5V	HC3890509F
Q802		HC3890909F	IC REG. NJM7809FA +9V 1A	HC3890909F

POS. NO	VERS. COLOR	PART NO. (FOR EUR)	DESCRIPTION	PART NO. (MJI)
Q803		HC3990909F	IC REG. NJM7909FA	HC3990909F
Q805		HT417622B0	TRS. 2SD1762 (E F)	HT417622B0
Q806		HC39124090	IC REG. NJM79L24A:0.1A-24V	HC39124090
Q807		HC38105090	IC REG. NJM78L05A	HC38105090
Q808		HX300012A0	CHIP TRS.	HX300012A0
			2SC4081 (Q R) 2SC4116 (Y GR)	
QD01		HC10011880	IC DAC CS4396-KS	HC10011880
			24BIT DR=120DB	
QD02		BA20035210	DIG. TRS. DTC114EU	BA20035210
QD03		HC10427050	IC TC7SHU04F 1PACK 1NV	HC10427050
QN01				
∫		HX300012A0	CHIP TRS.	HX300012A0
QN03			2SC4081 (Q R) 2SC4116 (Y GR)	
QN04		BA10026210	DIG. TRS. DTA114EU	BA10026210
QN05		BA20035210	DIG. TRS. DTC114EU	BA20035210
QN06		BA10026210	DIG. TRS. DTA114EU	BA10026210
QN07		BA10026210	DIG. TRS. DTA114EU	BA10026210
QN08		HX300012A0	CHIP TRS.	HX300012A0
			2SC4081 (Q R) 2SC4116 (Y GR)	
QN09		BA10026210	DIG. TRS. DTA114EU	BA10026210
QN10		HX346721A0	CHIP TRS. 2SC4672 Q	HX346721A0
QN11		BA20035210	DIG. TRS. DTC114EU	BA20035210
			PM01-MISCELLANEOUS	
⚠ F801		FS20100200	FUSE 1A 250V SEMKO VDE	FS20100200
⚠ F802		FS20100200	FUSE 1A 250V SEMKO VDE	FS20100200
J601		YT02021080	TERMINAL YKC21-3337 CINCH	YT02021080
			P-JACK W/R GOLD	
JR91		YT02020890	TERMINAL 2P CINCH PIN JACK	YT02020890
JT91		YT02010790	TERMINAL 14X14 RA 1L1P	YT02010790
			BLK AU FLM-GND	
JT92		YJ15000210	OPT. CONNECTOR JFJ300	YJ15000210
L829		FC90050130	CHIP FERRITE BL02RN2-R62T2	FC90050130
LD01		FC90050130	CHIP FERRITE BL02RN2-R62T2	FC90050130
LD02		FN31000020	BLM11B252SD	FN31000020
LD03		FC90020110	CHIP FERRITE BLM11B601S	FC90020110
LR91		FC90020110	CHIP FERRITE BLM11B601S	FC90020110
LT91		TP41042030	PULSE TRNSF.	TP41042030
			(TPS247MN-0386AN)	
LT92		FC90020110	CHIP FERRITE BLM11B601S	FC90020110
SR01		SS01021010	SLIDE SWITCH SSSF12-S06N0	SS01021010
			HORIZONTAL N-SHOT	
			PP01-MAINS SWITCH	
			CIRCUIT BOARD	
⚠ C001		DF77103500	FILM. 0.01µF M 250V AC	DF77103500
⚠ F001		FS10050850	FUSE 500 MA 250V BS LISTED	FS10050850
⚠ J001		YP04000760	PLUG CONNECTOR 2P B3P-VH	YP04000760
⚠ J003	/C/F/N	YP04000760	PLUG CONNECTOR 2P B3P-VH	YP04000760
	/S			
⚠ J003	/K	nsp	PLUG B3P5-VH	YP04000920
⚠ S001		SP01012480	PUSH SW. ESB92S94B TV-5 1.5MM	SP01012480
⚠ S002	/K	nsp	SLIDE SW. SDKGA4 SEMKO	SS02021510
			PS01-SERVO	
			CIRCUIT BOARD	
			PS01-CAPACITORS	
C101		nsp	CER. CHIP 5pF ±0.25pF CH 50V	DD90050300
C102		nsp	CER. CHIP 0.01µF	DK98103300
C103		nsp	CER. CHIP 0.1µF GRM39F104Z16	DK98104200
C104		nsp	CER. CHIP 4700pF ±10% B 50V	DK96472300
C105		nsp	ELECT. 47µF M 16V RA-2	OA47601620
C108		nsp	ELECT. 47µF M 16V RA-2	OA47601620
C110		nsp	ELECT. 100µF M 10V RA-2	OA10701020
C111				
∫		nsp	CER. CHIP 0.1µF GRM39F104Z16	DK98104200
C114				
C115		nsp	CER. CHIP 1000pF ±10% B 50V	DK96102300
C116		nsp	CER. CHIP 1000pF ±10% B 50V	DK96102300

NOTE : "nsp" PART IS LISTED FOR REFERENCE ONLY, MARANTZ WILL NOT SUPPLY THESE PARTS.

POS. NO	VERS. COLOR	PART NO. (FOR EUR)	DESCRIPTION	PART NO. (MJI)
C117 ∫ C120		nsp	CER. CHIP 0.1μF GRM39F104Z16	DK98104200
C121		nsp	CER. CHIP 1000pF ±10% B 50V	DK96102300
C122 ∫ C125		nsp	CER. CHIP 0.1μF GRM39F104Z16	DK98104200
C126		nsp	CER. CHIP 1000pF ±10% B 50V	DK96102300
C127		nsp	CER. CHIP 0.1μF GRM39F104Z16	DK98104200
C128		nsp	CER. CHIP 0.1μF GRM39F104Z16	DK98104200
C129		nsp	CER. CHIP 1000pF ±10% B 50V	DK96102300
C130		nsp	CER. CHIP 0.1μF GRM39F104Z16	DK98104200
C131		nsp	CER. CHIP 1000pF ±10% B 50V	DK96102300
C132		nsp	CER. CHIP 0.1μF GRM39F104Z16	DK98104200
C133		nsp	CER. CHIP 0.1μF GRM39F104Z16	DK98104200
C150		nsp	CER. CHIP 0.047μF	DK98473300
C151		nsp	CER. CHIP 1000pF ±10% B 50V	DK96102300
C152		nsp	CER. CHIP 0.01μF	DK98103300
C153		nsp	CER. CHIP 1μF 10V F	DK98105200
C154		nsp	CER. CHIP 47pF ±5% CG 50V	DD95470300
C155		nsp	CER. CHIP 0.022μF	DK98223300
C158		nsp	CER. CHIP 22pF ±5% CG 50V	DD95220300
C159		nsp	CER. CHIP 22pF ±5% CG 50V	DD95220300
C163		nsp	CER. CHIP 180pF	DD95181300
C164		nsp	CER. CHIP 220pF	DK96221300
C165		nsp	CER. CHIP 220pF	DK96221300
C166		nsp	CER. CHIP 330pF	DK96331300
C167		nsp	CER. CHIP 180pF	DD95181300
C168		nsp	CER. CHIP 220pF	DK96221300
C169		nsp	CER. CHIP 220pF	DK96221300
C170		nsp	CER. CHIP 180pF	DD95181300
C171		nsp	CER. CHIP 220pF	DK96221300
C172		nsp	CER. CHIP 22pF ±5% CG 50V	DD95220300
C173		nsp	CER. CHIP 180pF	DD95181300
C174		nsp	CER. CHIP 220pF	DK96221300
C175		nsp	CER. CHIP 1μF 10V F	DK98105200
C176		nsp	CER. CHIP 22pF ±5% CG 50V	DD95220300
C177		nsp	CER. CHIP 22pF ±5% CG 50V	DD95220300
C178		nsp	CER. CHIP 0.01μF	DK98103300
C180		nsp	CER. CHIP 0.01μF	DK98103300
C181		nsp	CER. CHIP 0.01μF	DK98103300
C182		nsp	CER. CHIP 0.01μF	DK98103300
C184		nsp	CER. CHIP 22pF ±5% CG 50V	DD95220300
C185		nsp	CER. CHIP 0.1μF GRM39F104Z16	DK98104200
C187		nsp	CER. CHIP 0.1μF GRM39F104Z16	DK98104200
C188		nsp	CER. CHIP 2200pF	DK96222300
C192		nsp	CER. CHIP 0.1μF GRM39F104Z16	DK98104200
C193		nsp	CER. CHIP 1μF 10V F	DK98105200
C194		nsp	CER. CHIP 0.1μF GRM39F104Z16	DK98104200
C195		nsp	CER. CHIP 0.1μF GRM39F104Z16	DK98104200
C201		nsp	CER. CHIP 0.1μF GRM39F104Z16	DK98104200
C202		nsp	CER. CHIP 0.1μF GRM39F104Z16	DK98104200
C810		nsp	CER. CHIP 0.1μF GRM39F104Z16	DK98104200
C811		nsp	CER. CHIP 0.1μF GRM39F104Z16	DK98104200
CM02		nsp	ELECT. 100μF M 10V RA-2	OA10701020
CM03 ∫ CM06		nsp	CER. CHIP 0.1μF GRM39F104Z16	DK98104200
CM07		nsp	CER. CHIP 1μF 10V F	DK98105200
CM08		nsp	CER. CHIP 0.1μF GRM39F104Z16	DK98104200
CM09		nsp	CER. CHIP 1μF 10V F	DK98105200
CM10		nsp	CER. CHIP 0.1μF GRM39F104Z16	DK98104200
CM11		nsp	CER. CHIP 1μF 10V F	DK98105200
CM13		nsp	CER. CHIP 4700pF ±10% B 50V	DK96472300
CM14		nsp	CER. CHIP 470pF	DK96471300
CM15		nsp	CER. CHIP 1μF 10V F	DK98105200
CM16		nsp	CER. CHIP 0.1μF GRM39F104Z16	DK98104200

POS. NO	VERS. COLOR	PART NO. (FOR EUR)	DESCRIPTION	PART NO. (MJI)
CM17		nsp	CER. CHIP 470pF	DK96471300
CM18		nsp	CER. CHIP 4700pF ±10% B 50V	DK96472300
CM21		nsp	CER. CHIP 0.1μF GRM39F104Z16	DK98104200
CM22		nsp	CER. CHIP 0.1μF GRM39F104Z16	DK98104200
CM23		nsp	ELECT. 100μF M 10V RA-2	OA10701020
CM24		nsp	CER. CHIP 33pF ±5% CG 50V	DD95330300
CM25		nsp	CER. CHIP 47pF ±5% CG 50V	DD95470300
CM26		nsp	CER. CHIP 47pF ±5% CG 50V	DD95470300
CM27		nsp	CER. CHIP 47pF ±5% CG 50V	DD95470300
CY01 ∫ CY04		nsp	CER. CHIP 0.1μF GRM39F104Z16	DK98104200
CY05		nsp	CER. CHIP 1μF 10V F	DK98105200
CY06		nsp	CER. CHIP 0.1μF GRM39F104Z16	DK98104200
CY14		nsp	CER. CHIP 0.01μF	DK98103300
CY15		nsp	CER. CHIP 0.01μF	DK98103300
CY16		nsp	ELECT. 100μF M 10V RA-2	OA10701020
			PS01-RESISTORS	
R101		nsp	CHIP 4.7kΩ ±5% 1/16W	NN05472610
R102		nsp	CHIP 4.7kΩ ±5% 1/16W	NN05472610
R103		nsp	CHIP 4.7kΩ ±5% 1/16W	NN05472610
R104		nsp	CHIP 220kΩ ±5% 1/16W	NN05224610
R105		nsp	CHIP 2.2kΩ ±5% 1/16W	NN05222610
R106		nsp	CHIP 100kΩ ±5% 1/16W	NN05104610
R107		nsp	CHIP 15kΩ ±5% 1/16W	NN05153610
R109		nsp	CHIP 10kΩ ±5% 1/16W	NN05103610
R110		nsp	CHIP 47Ω ±5% 1/16W	NN05470610
R111		nsp	CHIP 5.6kΩ ±5% 1/16W	NN05562610
R113		nsp	CHIP 2.7kΩ ±5% 1/16W	NN05272610
R114		nsp	CHIP 5.6kΩ ±5% 1/16W	NN05562610
R115		nsp	CHIP 12kΩ ±5% 1/16W	NN05123610
R116		nsp	CHIP 1kΩ ±5% 1/16W	NN05102610
R117		nsp	CHIP 1.5kΩ ±5% 1/16W	NN05152610
R118		nsp	CHIP 18kΩ ±5% 1/16W	NN05183610
R119		nsp	CHIP 15kΩ ±5% 1/16W	NN05153610
R120		nsp	CHIP 12kΩ ±5% 1/16W	NN05123610
R121		nsp	CHIP 10kΩ ±5% 1/16W	NN05103610
R122		nsp	CHIP 12kΩ ±5% 1/16W	NN05123610
R123		nsp	CHIP 12kΩ ±5% 1/16W	NN05123610
R124		nsp	CHIP 1kΩ ±5% 1/16W	NN05102610
R125		nsp	CHIP 390Ω ±5% 1/16W	NN05391610
R126		nsp	CHIP 22Ω ±5% 1/16W	NN05220610
R127		nsp	CHIP 15kΩ ±5% 1/16W	NN05153610
R129		nsp	CHIP 1kΩ ±5% 1/16W	NN05102610
R130		nsp	CHIP 22Ω ±5% 1/16W	NN05220610
R131		nsp	CHIP 220Ω ±5% 1/16W	NN05221610
R132		nsp	CHIP 220Ω ±5% 1/16W	NN05221610
R133		nsp	CHIP 22Ω ±5% 1/16W	NN05220610
R134		nsp	CHIP 22Ω ±5% 1/16W	NN05220610
R135		nsp	CHIP 3.3kΩ ±5% 1/16W	NN05332610
R136		nsp	CHIP 180kΩ ±5% 1/16W	NN05184610
R137		nsp	CHIP 100kΩ ±5% 1/16W	NN05104610
R138		nsp	CHIP 100kΩ ±5% 1/16W	NN05104610
R139		nsp	CHIP 1kΩ ±5% 1/16W	NN05102610
R140		nsp	CHIP 10kΩ ±5% 1/16W	NN05103610
R141		nsp	CHIP 470Ω ±5% 1/16W	NN05471610
R142		nsp	CHIP 2.2kΩ ±5% 1/16W	NN05222610
R143		nsp	CHIP 100kΩ ±5% 1/16W	NN05104610
R144		nsp	CHIP 1kΩ ±5% 1/16W	NN05102610
R145		nsp	CHIP 100Ω ±5% 1/16W	NN05101610
R146		nsp	CHIP 2.2kΩ ±5% 1/16W	NN05222610
R147		nsp	CHIP 2.2kΩ ±5% 1/16W	NN05222610
R148		nsp	CHIP 100kΩ ±5% 1/16W	NN05104610
R149		nsp	CHIP 150kΩ ±5% 1/16W	NN05154610
R150		nsp	CHIP 10kΩ ±5% 1/16W	NN05103610
R151		nsp	CHIP 470Ω ±5% 1/16W	NN05471610
R152		nsp	CHIP 1MΩ ±5% 1/16W	NN05105610

NOTE : "nsp" PART IS LISTED FOR REFERENCE ONLY, MARANTZ WILL NOT SUPPLY THESE PARTS.

POS. NO	VERS. COLOR	PART NO. (FOR EUR)	DESCRIPTION	PART NO. (MJI)
R153		nsp	CHIP 22kΩ ±5% 1/16W	NN05223610
R154		nsp	CHIP 1kΩ ±5% 1/16W	NN05102610
R155 ∫ R165		nsp	CHIP 10kΩ ±5% 1/16W	NN05103610
R166		nsp	CHIP 47Ω ±5% 1/16W	NN05470610
R167		nsp	CHIP 33kΩ ±5% 1/16W	NN05333610
R168		nsp	CHIP 22Ω ±5% 1/16W	NN05220610
R169		nsp	CHIP 22Ω ±5% 1/16W	NN05220610
R170		nsp	CHIP 100Ω ±5% 1/16W	NN05101610
R171		nsp	CHIP 10kΩ ±5% 1/16W	NN05103610
R172		nsp	CHIP 10Ω ±5% 1/16W	NN05100610
R173		nsp	CHIP 0Ω ±5% 1/16W	NN05000610
R174		nsp	CHIP 1kΩ ±5% 1/16W	NN05102610
R175		nsp	CHIP 100Ω ±5% 1/16W	NN05101610
R176		nsp	CHIP 10kΩ ±5% 1/16W	NN05103610
R177		nsp	CHIP 100Ω ±5% 1/16W	NN05101610
R178		nsp	CHIP 1kΩ ±5% 1/16W	NN05102610
R179		nsp	CHIP 47Ω ±5% 1/16W	NN05470610
R180		nsp	CHIP 100Ω ±5% 1/16W	NN05101610
R181		nsp	CHIP 0Ω ±5% 1/16W	NN05000610
R182		nsp	CHIP 100Ω ±5% 1/16W	NN05101610
R183		nsp	CHIP 1kΩ ±5% 1/16W	NN05102610
R185		nsp	CHIP 680Ω ±5% 1/16W	NN05681610
R186		nsp	CHIP 1kΩ ±5% 1/16W	NN05102610
R187		nsp	CHIP 1MΩ ±5% 1/16W	NN05105610
R188		nsp	CHIP 220Ω ±5% 1/16W	NN05221610
R189 ∫ R192		nsp	CHIP 10kΩ ±5% 1/16W	NN05103610
R194		nsp	CHIP 10Ω ±5% 1/16W	NN05100610
R195		nsp	CHIP 5.6Ω ±5% 1/16W	NN05056610
R196		nsp	CHIP 4.7kΩ ±5% 1/16W	NN05472610
R197		nsp	CHIP 4.7kΩ ±5% 1/16W	NN05472610
R198		nsp	CHIP 4.7kΩ ±5% 1/16W	NN05472610
R199		nsp	CHIP 220Ω ±5% 1/16W	NN05221610
R201		nsp	CHIP 10kΩ ±5% 1/16W	NN05103610
R202		nsp	CHIP 22kΩ ±5% 1/16W	NN05223610
R211		nsp	CHIP 68Ω ±5% 1/16W	NN05680610
R212		nsp	CHIP 5.6Ω ±5% 1/16W	NN05056610
R213		nsp	CHIP 5.6Ω ±5% 1/16W	NN05056610
R220		nsp	CHIP 12kΩ ±5% 1/16W	NN05123610
R221		nsp	CHIP 100Ω ±5% 1/16W	NN05101610
R226		nsp	CHIP 22Ω ±5% 1/16W	NN05220610
R227		nsp	CHIP 0Ω ±5% 1/16W	NN05000610
RM01		nsp	CHIP 1kΩ ±5% 1/16W	NN05102610
RM02		nsp	CHIP 10Ω ±5% 1/16W	NN05100610
RM03		nsp	CHIP 10Ω ±5% 1/16W	NN05100610
RM04		nsp	CHIP 4.7Ω ±5% 1/16W	NN05047610
RM05 ∫ RM09		nsp	CHIP 10Ω ±5% 1/16W	NN05100610
RM11		nsp	CHIP 330Ω ±5% 1/16W	NN05331610
RM12		nsp	CHIP 330Ω ±5% 1/16W	NN05331610
RM13		nsp	CHIP 330Ω ±5% 1/16W	NN05331610
RM14		nsp	CHIP 10Ω ±5% 1/16W	NN05100610
RM15		nsp	CHIP 10Ω ±5% 1/16W	NN05100610
RM16		nsp	CHIP 1kΩ ±5% 1/16W	NN05102610
RM17		nsp	CHIP 10Ω ±5% 1/16W	NN05100610
RM18		nsp	CHIP 470kΩ ±5% 1/16W	NN05474610
RM19		nsp	CHIP 470Ω ±5% 1/16W	NN05471610
RM24		nsp	CHIP 1kΩ ±5% 1/16W	NN05102610
RM51 ∫ RM54		nsp	CHIP 1kΩ ±5% 1/16W	NN05102610
RR21		nsp	CHIP 10kΩ ±5% 1/16W	NN05103610
RR22		nsp	CHIP 2.2kΩ ±5% 1/16W	NN05222610
RR23		nsp	CHIP 10kΩ ±5% 1/16W	NN05103610

POS. NO	VERS. COLOR	PART NO. (FOR EUR)	DESCRIPTION	PART NO. (MJI)
RY01		nsp	CHIP 47kΩ ±5% 1/16W	NN05473610
RY02		nsp	CHIP 10Ω ±5% 1/16W	NN05100610
RY03		nsp	CHIP 47kΩ ±5% 1/16W	NN05473610
RY04		nsp	CHIP 47kΩ ±5% 1/16W	NN05473610
RY05		nsp	CHIP 10Ω ±5% 1/16W	NN05100610
RY06		nsp	CHIP 47kΩ ±5% 1/16W	NN05473610
RY07		nsp	CHIP 10Ω ±5% 1/16W	NN05100610
RY08		nsp	CHIP 47kΩ ±5% 1/16W	NN05473610
RY09		nsp	CHIP 10kΩ ±5% 1/16W	NN05103610
RY10		nsp	CHIP 47kΩ ±5% 1/16W	NN05473610
RY11		nsp	CHIP 10Ω ±5% 1/16W	NN05100610
RY13		nsp	CHIP 10kΩ ±5% 1/16W	NN05103610
RY14		nsp	CHIP 10kΩ ±5% 1/16W	NN05103610
RY15		nsp	CHIP 10kΩ ±5% 1/16W	NN05103610
RY17		nsp	CHIP 4.7kΩ ±5% 1/16W	NN05472610
RY21		nsp	CHIP 1kΩ ±5% 1/16W	NN05102610
RY22		nsp	CHIP 1kΩ ±5% 1/16W	NN05102610
RY23		nsp	CHIP 1kΩ ±5% 1/16W	NN05102610
			PS01-SEMICONDUCTORS	
D101		HZ21005000	CHIP DIODE 1SS301 DAN202U	HZ21005000
D102		HZ21005000	CHIP DIODE 1SS301 DAN202U	HZ21005000
DR02		HZ21005000	CHIP DIODE 1SS301 DAN202U	HZ21005000
Q101		HC10207490	IC TZA1024 RF AMP	HC10207490
Q102		HX300012A0	CHIP TRS. 2SC4081 (Q R) 2SC4116 (Y GR)	HX300012A0
Q103 ∫ Q105		HC10165490	IC TDA7073AT SOP DUAL BTL DRIVER	HC10165490
Q106		BA10026210	DIG. TRS. DTA114EU	BA10026210
Q107		BA20035210	DIG. TRS. DTC114EU	BA20035210
Q108		BA20035210	DIG. TRS. DTC114EU	BA20035210
Q109		HX300012A0	CHIP TRS. 2SC4081 (Q R) 2SC4116 (Y GR)	HX300012A0
Q110		HX100012A0	CHIP TRS. 2SA1586 (Y GR) 2SA1576A (Q R)	HX100012A0
Q111 ∫ Q114		HX300012A0	CHIP TRS 2SC4081 (Q R) 2SC4116 (Y GR)	HX300012A0
Q150		HC10209490	IC SAA7324H/M2B	HC10209490
Q152		HC762837Z0	IC SN74LS628NS	HC762837Z0
Q153		HC10225210	IC BU2630FV-E2	HC10225210
Q154		HC90005090	IC NJM78L05UA CHIP REG	HC90005090
Q201		HC10390030	IC CD TEXT DECORDER SANYO	HC10390030
QM01		HC10010540	IC STA016T MP3 DECODER	HC10010540
QM02		HX346721A0	CHIP TRS. 2SC4672 Q	HX346721A0
QR21		HX300012A0	CHIP TRS. 2SC4081 (Q R) 2SC4116 (Y GR)	HX300012A0
QY01		HU05AKN10F	MICROPROCESSOR UPD784216AGC-175-8EU	HU05AKN10F
QY02		HC10224210	IC BD4742G RESET IC 4.2V	HC10224210
QY03		HC10033990	IC AT24C04N-10SI-2.5	HC10033990
			PS01-MISCELLANEOUS	
L150		FC90020110	CHIP FERRITE BLM11B601S	FC90020110
L151		FN31000020	BLM11B252SD	FN31000020
L801		FC90020110	CHIP FERRITE BLM11B601S	FC90020110
LM01		FC90050130	CHIP FERRITE BL02RN2-R62T2	FC90050130
LM03 ∫ LM06		FN31000020	BLM11B252SD	FN31000020
LM07		FC90020110	CHIP FERRITE BLM11B601S	FC90020110
LM08		FC90020110	CHIP FERRITE BLM11B601S	FC90020110
X150		JX08001320	CRYSTAL CM309S 8.4672MHz	JX08001320
XY01		FQ01005020	CERAMIC VIB. CSTCC10.0MG RESONATOR 10MHz	FQ01005020

NOTE : "nsp" PART IS LISTED FOR REFERENCE ONLY, MARANTZ WILL NOT SUPPLY THESE PARTS.

POS. NO	VERS. COLOR	PART NO. (FOR EUR)	DESCRIPTION	PART NO. (MJI)
			PT01-TRANS CIRCUIT BOARD	
⚠ J007	/K	nsp	PLUG B3P5-VH	YP04000920
⚠ J007	/C/F/N /S	YP04000760	PLUG CONNECTOR 2P B3P-VH	YP04000760
⚠ T001	/F	nsp	MAINS TRANSF. EI57-25 100V 50/60HZ	TS15725190
⚠ T001	/K	nsp	MAINS TRANSF. EI57-25 110V/220V 50/60HZ	TS15725200
⚠ T001	/C/N/S	TS15725210	MAINS TRANSF. EI57-25 230V 50HZ	TS15725210

NOTE : "nsp" PART IS LISTED FOR REFERENCE ONLY, MARANTZ WILL NOT SUPPLY THESE PARTS.